MASTER PARTS MANUAL

ROTARY MOWERS

RALLY LAWN TRACTORS

MODELS:

M1118AR	L0239AR
M6187AR	L1219AR — nev. Football Cilange.
M6517BR	L8218AR
M6538AR	L8218BR
	L8218CR
8ev { K8327AR	
K8327BR	LA049AR
K8327CR	LA058AR
	LA068AR

Jeuse de lames 71285
Courroie traction. 73794
" tondeuse. 62828

LAWN AND GARDEN
POWER EQUIPMENT

ROPER SALES CORP.

1905 WEST COURT STREET
KANKAKEE, ILLINOIS 60901

PRICE $2.00
FEBRUARY 1, 1979

ROPER 20" 148 CC 3.5 H.P. ROTARY LAWN MOWER MODEL NUMBER M1118AR

REPAIR PARTS

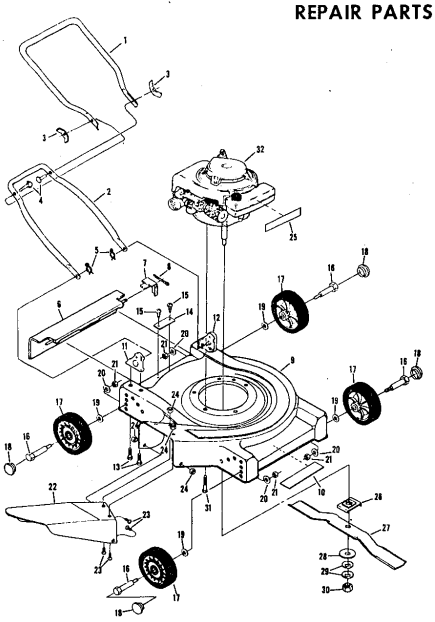

ROPER 20" 148 CC 3.5 H.P. ROTARY LAWN MOWER MODEL NUMBER M1118AR

REPAIR PARTS

Ref. No.	Part No.	Part Name	Ref. No.	Part No.	Part Name
1	64932	Handle – Upper	18	67360	Hub Cap (R.R.–L.R.–R.F.–L.F.)
2	62362	Handle – Lower	19	70080	Washer, Flat Steel .405–.860 X .250 (R.R.–L.R.–R.F.–L.F.)
3	67504	Wing Nut 5/16–18	20	54005	Washer, Flat Steel .405–.860 X .095 (R.R.–L.R.–R.F.–L.F.)
4	58714	Bolt, Handle 5/16–18 X 1 3/4	21	74400	Nut, Lock 3/8–16 (R.R.–L.R.–R.F.–L.F.)
5	51793	Hairpin Cotter – 3/4	22	67731	Discharge Guard
6	72502	Rear Skirt	23	69179	Screw, Machine #10–24 X 1/2
7	72503	Skirt Keeper	24	69180	Nut, Lock #10–24
8	63640	Cotter Pin – 3/4	25	75773	Decal – Fuel Tank
9	79262	Housing W/Silk Screening W/Decal (Incl. Ref. #10)	26	69226	Blade Flange Assembly
10	73221	Decal – Housing	27	69229	Blade
11	62886	Handle Bracket Assembly–Right	28	69385	Washer, Blade
12	62887	Handle Bracket Assembly–Left	29	54867	Washer, Spring (Belleville Type)
13	55187	Screw, Self–Tapping 5/16–18 X 3/4	30	51433	Nut, Nylok 5/8–18
14	75766	Number Plate	31	68205	Screw, Machine Hex Head W/Lock Washer 5/16–18 X 7/8
15	54562	Screw, Self–Tapping #10–24 X 3/8	32		Engine–Model (LAV 35–40945L) (3.5 H.P.) (Tecumseh Products Company)
16	60838	Axle Bolt 3/8–16 (R.R.–L.R.–R.F.–L.F.)		75768	Parts List – Owner's Manual
17	75071	Wheel and Tire Assembly–7" (R.R.–L.R.–R.F.–L.F.)			

ROPER 20" WHIP STIK™ 164CC 4.0 H.P. POWER PROPELLED LAWN MOWER MODEL NUMBER M6187AR

REPAIR PARTS

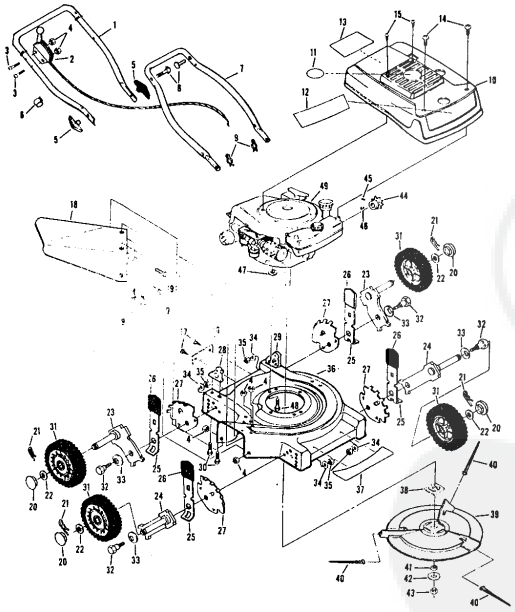

ROPER 20" WHIP STIK™ 164CC 4.0 H.P. POWER PROPELLED LAWN MOWER MODEL NUMBER M6187AR

Ref. No.	Part No.	Part Name	Ref. No.	Part No.	Part Name
1	75193	Handle – Upper	28	62886	Handle Bracket Assembly–Right
2	73445	Remote Control	29	62887	Handle Bracket Assembly–Left
3	69411	Screw, Machine Phillips #10–24 X 1 3/4	30	55187	Screw, Self–Tapping 5/16–18 X 3/4
4	69180	Nut, Lock #10–24	31	72425	Wheel and Tire Assembly–8" (R.R.–L.R.–R.F.–L.F.)
5	58715	Knob – Handle	32	64763	Bolt, Shoulder (Special) 3/8–16 (R.R.–L.R.–R.F.–L.F.)
6	58891	Cable Clip	33	62335	Washer, Belleville .505–1.10 X .082 (R.R.–L.R.–R.F.–L.F.)
7	62362	Handle – Lower	34	62333	Washer, Flat Steel .390–1.437 X .074 (R.R.–L.R.–R.F.–L.F.)
8	58714	Bolt, Handle 5/16–18 X 1 3/4	35	74400	Nut, Lock 3/8–16
9	51793	Hairpin Cotter – 3/4	36	79294	Housing W/Silk Screening W/Decal (Incl. Ref. #37)
10	79295	Engine Shroud Pack (Incl. Ref. #11,12,13)	37	75325	Decal – Housing
11	74779	Decal – Center	38	74454	Flange Assembly
12	75216	Decal – Shroud	39	74199	Pin Holder
13	74656	Decal – Engine Instruction	40	74334	Pin (Three required)
14	73322	Screw, Self–Tapping #8 X 3/4	41	74393	Spacer
15	68346	Screw, Self–Tapping 1/4–20 X 3/4	42	74456	Washer, Belleville .630–1.875 X .129
16	75215	Number Plate	43	51433	Nut, Nylok 5/8–18
17	54562	Screw, Self–Tapping #10–24 X 3/8	44	71851	Sprocket 9 Tooth W/2 Set Screw (Incl. Ref. #45)
18	67731	Discharge Guard	45	52828	Set Screw 1/4–28 X 3 16
19	69179	Screw, Machine #10–24 X 1/2	46	52978	Key, Woodruff #5
20	67360	Hub Cap (R.R.–L.R.–R.F.–L.F.)	47	59289	Washer, Flat Steel .328–1 X .097
21	55015	Retainer Clip (R.R.–L.R.–R.F.–L.F.)	48	68205	Screw, Machine Hex Head 5/16–18 X 7/8
22	52160	Washer, Flat Steel .515–1 X .031 (R.R.–L.R.–R.F.–L.F.)	49		Engine–Model (LAV 40–50375D) (Tecumseh Products Company) (4.0 H.P.)
23	69474	Axle Arm Assembly (R.R. –L.R.)		75218	Parts List – Owner's Manual
24	73632	Axle Arm Assembly (R.F.–L.F.)			
25	70683	Selector Spring (R.R.–L.R.–R.F.–L.F.)			
26	70685	Selector Knob (R.R.–L.R.–R.F.–L.F.)			
27	69478	Wheel Adjusting Bracket (R.R.–L.R.–R.F.–L.F.)			

ROPER 20" WHIP STIK™ 164CC 4.0 H.P. POWER PROPELLED LAWN MOWER MODEL NUMBER M6187AR

REPAIR PARTS

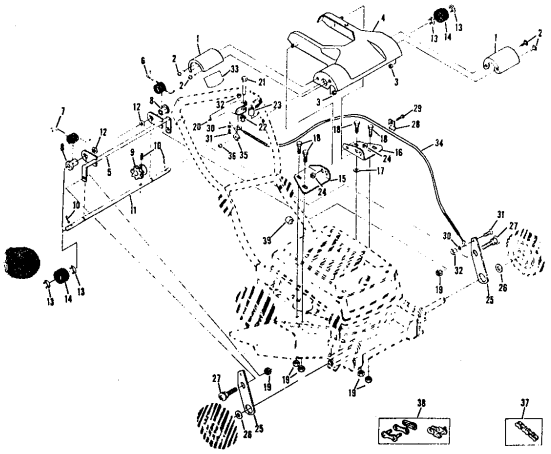

ROPER 20" WHIP STIK™ 164CC 4.0 H.P. POWER PROPELLED LAWN MOWER MODEL NUMBER M6187AR

Ref. No.	Part No.	Part Name
1	73629	Drive Cover
2	75136	Screw, Machine #10–24 X 1/2
3	53491	Nut, Lock #10–24
4	73787	Chain Cover Assembly
5	73626	Yoke Assembly
6	73115	Spring – L.H.
7	73172	Spring – R.H.
8	73087	Bearing
9	73696	Sprocket – 8 Tooth
10	52379	Spring Pin 3/16 X 1
11	73628	Driven Shaft
12	73928	Washer, Flat Steel .828–1.25 X .028
13	52364	E–Ring 5/8 Shaft
14	67973	Driver
15	75213	Pivot – R.H.
16	75214	Pivot – L.H.
17	63128	Washer, Flat Steel .265–3/4 X .082
18	54395	Screw, Hex Head 1/4–20 X 5/8
19	74218	Nut, Lock 1/4–20
20	74161	Lever
21	72978	Bolt, Shoulder (Special) 1/4–28 X 1 5/8
22	72979	Nut, Shoulder (Special) 1/4–28
23	73405	Spacer
24	52365	E–Ring 3/8 Shaft
25	74162	Lower Link
26	74232	Washer, Flat Steel .531–1.187 X .148
27	73916	Bolt, Shoulder (Special) 1/4–20
28	73276	Retainer
29	55187	Screw, Self–Tapping 5/16–18 X 3/4
30	74190	Spacer
31	57155	Screw, Machine #10–24 X 5/8
32	69180	Nut, Lock #10–24
33	73442	Decal – Clutch
34	74158	Cable
35	73755	Cable Clamp
36	68662	Screw, Self–Tapping #10 X 7/8
37	74787	Chain #65 (44 Pitches)
38	60472	Repair Link Kit (Incl. Offset and Connecting Link)
39	58891	Cable Clip

ROPER 20" HIGH WHEEL REAR BAGGER 4.0 H.P. ROTARY LAWN MOWER MODEL NUMBER M6517BR

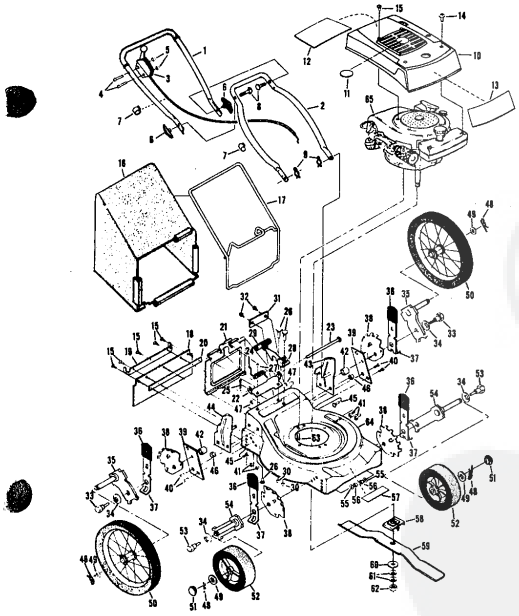

ROPER 20" HIGH WHEEL REAR BAGGER 4.0 H.P. ROTARY LAWN MOWER MODEL NUMBER M6517BR

Ref. No.	Part No.	Part Name
1	74678	Handle – Upper
2	62362	Handle – Lower
3	73445	Remote Control
4	69411	Screw, Machine Phillips #10–24 X 1 3/4
5	69180	Nut, Lock #10–24
6	58715	Knob – Handle
7	58891	Cable Clip
8	58714	Bolt, Handle 5/16–18 X 1 3/4
9	51793	Hairpin Cotter – 3/4
10	79261	Engine Shroud Pack (Incl. Ref. #11,12,13)
11	74640	Decal – Center
12	74909	Decal – Engine Instruction
13	74960	Decal – Shroud
14	73322	Screw, Self–Tapping #8 X 3/4
15	68346	Screw, Self–Tapping 1/4–20 X 3/4
16	75363	Catcher Bag
17	72870	Catcher Frame
18	73872	Rear Skirt
19	73176	Catcher Support
20	73061	Backing Strip
21	72869	Rear Door
22	73215	Hinge Bracket
23	73326	Hinge Rod
24	72962	Spring
25	63640	Cotter Pin – 5/64
26	73383	Bolt, Carriage 1/4–20 X 5/8
27	63601	Nut, Lock 1/4–20
28	72881	Catcher Latch (Incl. Ref. #29)
29	68618	Knob
30	74218	Nut, Lock 1/4–20
31	75614	Number Plate
32	54562	Screw, Self–Tapping #–10–24 X 3/8
33	73714	Bolt, Shoulder 5/16–18 (Special) (R.R.–L.R.)
34	62335	Washer, Belleville .505–1.10 X .082 (R.R.–L.R.–R.F.–L.F.)
35	73420	Axle Arm Assembly (R.R.–L.R.)
36	70685	Knob–Selector (R.F.–L.F.–R.R. –L.R.)
37	70683	Selector Spring (R.F.–L.F.–R.R. –L.R.)
38	69478	Wheel Adjusting Bracket (R.F.–L.F.–R.R.–L.R.)
39	73712	Bracket Support (R.R.–L.R.)
40	73603	Bolt, Hex Head 3/8–16 X 5/8 (R.R.–L.R.)
41	51961	Nut, Lock 3/8–16 (R.R.–L.R.)
42	73713	Spacer (R.R.–L.R.)
43	78992	Handle Bracket – L.H.
44	78991	Handle Bracket – R.H.
45	75156	Bolt, Carriage 5/16–18 X 1/2 (R.R.–L.R.)
46	74399	Nut, Lock 5/16 X 18
47	68478	Nut, Lock 5/16 X 18 (R.R.–L.R.)
48	55015	Retainer Clip (R.R.–L.R.–R.F. – L.F.)
49	52160	Washer, Flat Steel .515–1 X .031 (R.R.–L.R.–R.F.–L.F.)
50	73422	Wheel and Tire Assembly 14.00 X 1.75 (R.R.–L.R.)
51	67360	Hub Cap
52	75073	Wheel and Tire Assembly 8.00 X 1.75 (R.F.–L.F.)
53	64763	Bolt, Shoulder 3/8–16 (Special) (R.F.–L.F.)
54	69474	Axle Arm Assembly (R.F.–L.F.)
55	62333	Washer, Flat Steel .390–1.437 X .074 (R.F.–L.F.)
56	65543	Nut, Lock 3/8–16 (R.F.–L.F.)
57	73221	Decal – Housing
58	69226	Blade Flange Assembly
59	69229	Blade
60	69385	Washer, Blade
61	54867	Washer, Spring (Belleville Type)
62	51433	Nut, Nylok 5/8–18
63	68205	Screw, Machine Hex Head W. Lock Washer 5/16–18 X 7/8
64	79258	Housing W/Silk (With Decal) (Incl. Ref. #57)
65		Engine–Model (LAV 40–50374D) (Tecumseh Products Co.) 4.0 H.P.
	75616	Parts List–Owner's Manual

ROPER 20" REAR BAGGER 164CC 4.0 H.P. POWER-PROPELLED LAWN MOWER MODEL NUMBER M6538AR

REPAIR PARTS

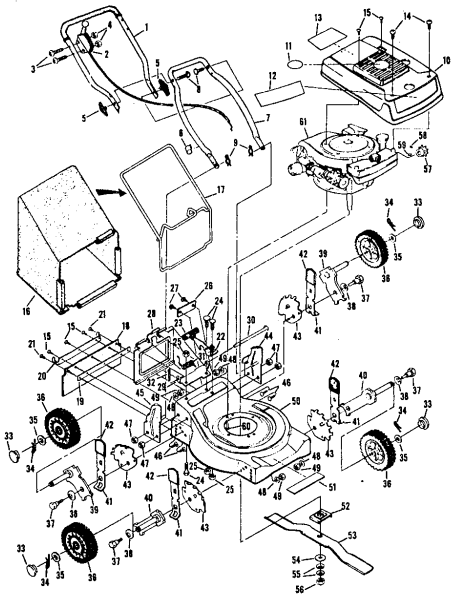

ROPER 20" REAR BAGGER 164CC 4.0 H.P. POWER-PROPELLED LAWN MOWER MODEL NUMBER M6538AR

REPAIR PARTS

Ref. No.	Part No.	Part Name
1	76468	Handle – Upper
2	73445	Remote Control
3	69411	Screw, Machine Phillips #10–24 X 1 3/4
4	69180	Nut, Lock #10–24
5	58715	Knob – Handle
6	58891	Cable Clip
7	62362	Handle – Lower
8	58714	Bolt, Handle 5/16–18 X 1 3/4
9	51793	Hairpin Cotter – 3/4
10	79261	Engine Shroud Pack (Incl. Ref. #11, 12, 13)
11	74640	Decal – Center
12	74960	Decal – Shroud
13	74909	Decal – Engine Instruction
14	73322	Screw, Self–Tapping #8 X 3/4
15	68346	Screw, Self–Tapping 1/4–20 X 3/4
16	75363	Catcher Bag
17	72870	Catcher Frame
18	72883	Rear Skirt
19	73061	Backing Strip
20	73176	Catcher Support
21	73845	Screw, Self–Tapping 1/4–20 X 1/2
22	72881	Catcher Latch (Incl. Ref. #23)
23	68618	Knob
24	73383	Bolt, Carriage 1/4–20 X 5/8
25	74218	Nut, Lock 1/4–20
26	75788	Number Plate
27	54562	Screw, Self–Tapping #10–24 X 3/8
28	72869	Rear Door
29	73215	Hinge Bracket
30	73326	Hinge Rod
31	72962	Spring
32	63640	Cotter Pin – 3/4
33	67360	Hub Cap (R.R.–L.R.–R.F.–L.F.)
34	55015	Retainer Clip (R.R.–L.R.–R.F.–L.F.)
35	52160	Washer, Flat Steel .515–1 X .031 (R.R.–L.R.–R.F.–L.F.)
36	72425	Wheel and Tire Assembly–8" (R.R.–L.R.–R.F.–L.F.)
37	64763	Bolt, Shoulder (Special) 3/8–16 (R.R.–L.R.–R.F.–L.F.)
38	62335	Washer, Belleville .505–1.10 X .082 (R.R.–L.R.–R.F.–L.F.)
39	69474	Axle Arm Assembly (R.R.–L.R.)
40	73632	Axle Arm Assembly (R.F.–L.F.)
41	70683	Selector Spring (R.R.–L.R.–R.F.–L.F.)
42	70685	Selector Knob (R.R.–L.R.–R.F.–L.F.)
43	69478	Wheel Adjusting Bracket (R.R.–L.R.–R.F.–L.F.)
44	78992	Handle Bracket Assembly–Left
45	78991	Handle Bracket Assembly–Right
46	75156	Bolt, Carriage 5/16–18 X 1/2 (R.R.–L.R.)
47	74399	Nut, Lock 5/16–18 (R.R.–L.R.)
48	62333	Washer, Flat Steel .390–1.437 X .074 (R.R.–L.R.–R.F.–L.F.)
49	74400	Nut, Lock 3/8–16 (R.R.–L.R.–R.F.–L.F.)
50	79269	Housing W/Silk Screening W/Decal (Incl. Ref. #51)
51	73221	Decal – Housing
52	69226	Blade Flange Assembly
53	69229	Blade
54	69385	Washer, Blade
55	54867	Washer, Spring (Belleville Type)
56	51433	Nut, Nylok 5/8–18
57	71851	Sprocket 9 Tooth W/2 Set Screw (Incl. Ref. #58)
58	52828	Set Screw 1/4–28 X 3/16
59	52978	Key, Woodruff #5
60	68205	Screw, Machine Hex Head 5/16–18 X 7/8
61		Engine–Model (LAV 40–50375D) (Tecumseh Products Company) (4.0 H.P.)
	75790	Parts List – Owner's Manual

ROPER 20" REAR BAGGER 164CC 4.0 H.P. POWER-PROPELLED LAWN MOWER MODEL NUMBER M6538AR

REPAIR PARTS

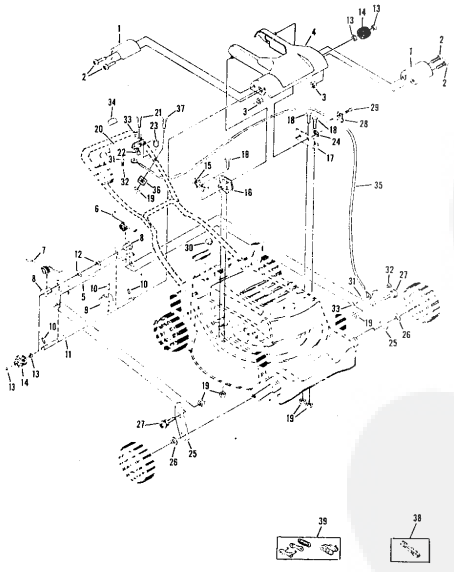

ROPER 20" REAR BAGGER 164CC 4.0 H.P. POWER-PROPELLED LAWN MOWER MODEL NUMBER M6538AR

REPAIR PARTS

Ref. No.	Part No.	Part Name
1	73629	Drive Cover
2	75136	Screw, Machine #10–24 X 1/2
3	53491	Nut, Lock #10–24
4	76335	Chain Cover Assembly
5	73626	Yoke Assembly
6	73115	Spring – L.H.
7	73172	Spring – R.H.
8	73087	Bearing
9	73696	Sprocket – 8 Tooth
10	52379	Spring Pin – 3/16 X 1
11	73628	Driven Shaft
12	73928	Washer, Flat Steel .828 – 1.25 X .028
13	52364	E–Ring 5/8 Shaft
14	67973	Driver
15	75043	Pivot Adjusting Bracket
16	74617	Pivot – R.H.
17	74618	Pivot – L.H.
18	54395	Screw, Hex Head 1/4–20 X 5/8
19	74218	Nut, Lock 1/4–20
20	74161	Lever
21	72978	Bolt, Shoulder (Special) 1/4–28 X 1 5/8
22	72979	Nut, Shoulder (Special) 1/4–28
23	73405	Spacer
24	52365	E–Ring 3/8 Shaft
25	74162	Lower Link
26	74232	Washer, Flat Steel .531–1.187 X .148
27	73916	Bolt, Shoulder (Special) 1/4–20
28	73276	Retainer
29	55187	Screw, Self–Tapping 5/16–18 X 3/4
30	58891	Cable Clip
31	74190	Spacer
32	57155	Screw, Machine 10–24 X 5/8
33	69180	Nut, Lock 10–24
34	73442	Decal – Clutch
35	76406	Cable
36	76370	Cable Clamp
37	66131	Screw, Machine 1/4–20 X 1 1/2
38	74787	Chain .65 (44 Pitches)
39	60472	Repair Link Kit (Incl. Offset and Connecting Link)

ROPER 32" REAR ENGINE RIDING LAWN MOWER ELECTRIC START 8.0 H.P. MODEL NUMBER K8327AR

REPAIR PARTS

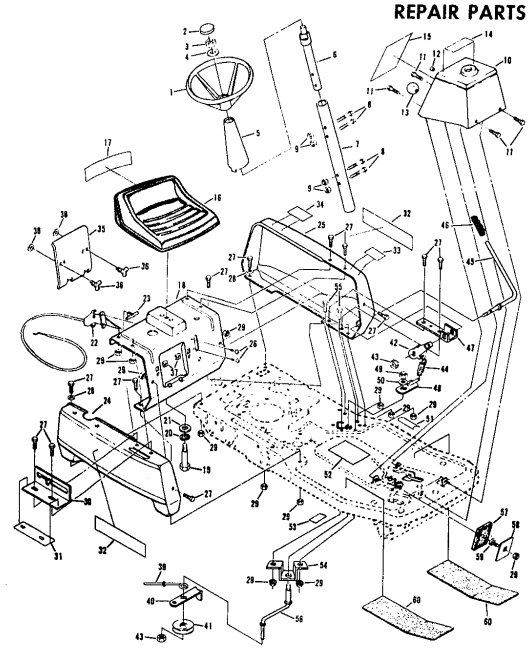

ROPER 32" REAR ENGINE RIDING LAWN MOWER ELECTRIC START 8.0 H.P. MODEL NUMBER K8327AR

Ref. No.	Part No.	Part Name	Ref. No.	Part No.	Part Name
1	74564	Steering Wheel	29	54922	Nut, Keps 5/16–18
2	74572	Insert Cap	30	74531	Shifter Gate
3	50830	Nut, Lock 1/2–20	31	74560	Decal – Shift
4	53632	Washer, Flat Steel .531–1 X .063	32	74601	Decal–Side Panel (L.H.–R.H.)
5	72705	Steering Shaft Cover	33	74561	Decal–Blade Control
6	74566	Steering Shaft – Upper	34	74512	Decal–Engine Area
7	74682	Steering Shaft Extension	35	72926	Battery Holder
8	60902	Bolt, Hex Head 1/4–20 X 1 1/4	36	73319	Wing Head Stud
9	63601	Nut, Lock 1/4–20	37	73320	Receptacle
10	74523	Console Assembly	38	73321	Split Ring
11	71263	Screw, Thread Cutting 5/16–18 X 1/2	39	72987	Blade Brake Rod
			40	74544	Belt Keeper
12	71673	Plunger Cap	41	53018	Idler Pulley
13	55862	Knob	42	74613	Spring Arm
14	75122	Decal–Operating Instructions	43	51961	Nut, Lock 3/8–16
15	74558	Decal–Instruction	44	75045	Spring
16	74563	Seat Assembly	45	74538	Blade Clutch Lever
17	75070	Decal – Seat	46	71246	Grip
18	74963	Front Panel	47	74539	Handle Bracket
19	72439	Bolt, Shoulder (Special) 1/2–13	48	75339	Control Arm Assembly
20	18810	Washer, Lock – 1/2"	49	62336	Nut, Lock 3/8–16
21	53084	Washer, Flat Steel .531–1.187 X .127	50	67510	Washer, Flat Steel .390–5/8 X .090
22	74537	Remote Control Assembly (Incl. Ref. #23)	51	74559	Decal–Enter and Exit
			52	74557	Decal–Brake Instruction
23	61159	Knob – Remote Control	53	68306	Decal–Clutch and Brake
24	74534	Side Panel – R.H.	54	74542	Idler Support Bracket
25	74532	Side Panel – L.H.	55	51630	Bolt, Carriage 5/16–18 X 3/4
26	68346	Screw, Self–Tapping 1/4–20 X 3/4	56	74543	Idler Arm
			57	67365	Foot Pad
27	71949	Screw, Machine Hex Head 5/16–18 X 3/4	58	67189	Foot Pedal Plate
			59	67613	Bolt, Carriage 5/16–18 X 3/4
28	52915	Washer, Flat Steel .328–1.125 X .063	60	72384	Floor Board Pad

ROPER 32" REAR ENGINE RIDING LAWN MOWER ELECTRIC START 8.0 H.P. MODEL NUMBER K8327AR

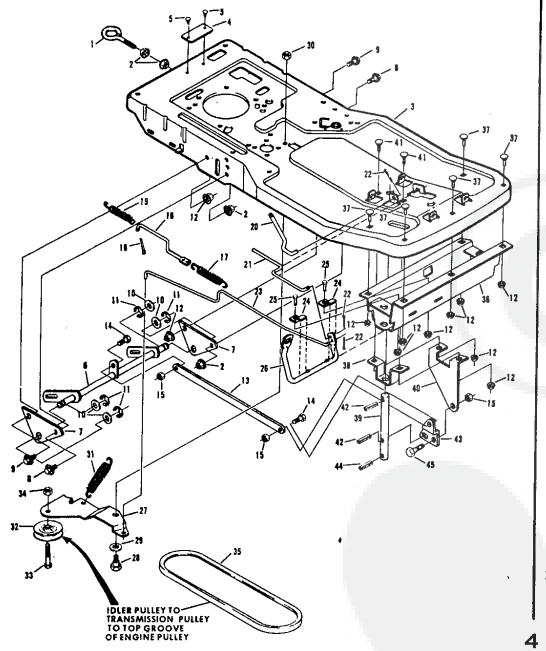

ROPER 32" REAR ENGINE RIDING LAWN MOWER ELECTRIC START 8.0 H.P. MODEL NUMBER K8327AR

Ref. No.	Part No.	Part Name	Ref. No.	Part No.	Part Name
1	70530	Tow Hitch – Eyebolt	24	72360	Foot Pedal Clamp
2	55615	Nut, Keps 3/8–16	25	54262	Screw, Machine Hex W/Washer 5/16–18 X 5/8
3	74514	Chassis Assembly			
4	74524	Number Plate	26	72387	Foot Pedal
5	61000	Plastic Rivet	27	67174	Motion Idler
6	75264	Lever Arm Assembly	28	55855	Bolt, Shoulder (Special) 5/16–24
7	75265	Side Bracket	29	67725	Washer, Flat Steel .531–1 X .134
8	55912	Screw, Hex Head 3/8–16 X 3/4	30	54958	Nut, Lock 5/16–24
9	51630	Screw, Hex Head 5/16–18 X 3/4	31	73275	Spring – Idler
10	53748	Washer, Flat Steel .640–1 X .063	32	53018	Pulley – Idler
11	52364	E–Ring 5/8 Shaft	33	55918	Screw, Hex Head 3/8–16 X 1 1/2
12	54922	Nut, Keps 5/16–18	34	51961	Nut, Hex Lock 3/8–16
13	74545	Parallel Bar	35	67346	V–Belt
14	67394	Bolt, Shoulder 5/16–18 X 3/4	36	72357	Front Member Assembly
15	63124	Nut, Lock 5/16–18	37	66238	Bolt, Carriage 5/16–18 X 5/8
16	72386	Brake Rod – Rear	38	72375	Lifter Bracket
17	64284	Spring	39	74516	Housing Lifter
18	2947	Cotter Pin – 3/4	40	74515	Bellcrank Bracket
19	62755	Spring	41	63079	Bolt, Carriage 5/16–18 X 1
20	74527	Lifter Handle	42	74576	Drive Lok Pin Type B
21	72361	Parking Brake Rod	43	74522	Bellcrank
22	63640	Cotter Pin – 3/4	44	73446	Drive Lok Pin Type F
23	72393	Motion Clutch and Brake Rod	45	68475	Bolt, Shoulder 5/16–18 X 3/4

ROPER 32" REAR ENGINE RIDING LAWN MOWER ELECTRIC START 8.0 H.P. MODEL NUMBER K8327AR

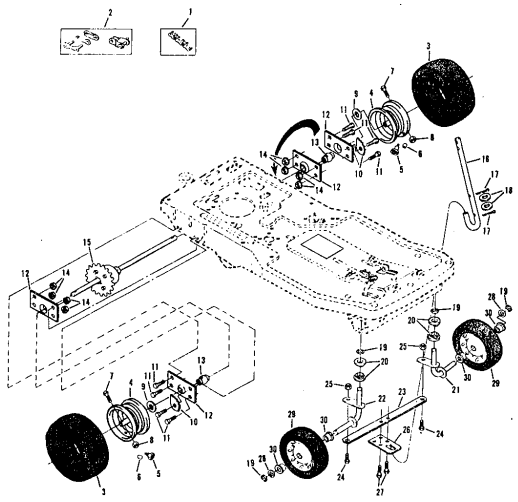

ROPER 32" REAR ENGINE RIDING LAWN MOWER ELECTRIC START 8.0 H.P. MODEL NUMBER K8327AR

Ref. No.	Part No.	Part Name	Ref. No.	Part No.	Part Name
1	72818	Chain #41 (82 Pitches)	17	2655	Cotter Pin – 1/8
2	60474	Repair Link Kit (Incl. Offset and Connecting Link)	18	57911	Washer, Flat Steel .640–1.250 X .063
3	70302	Tire–13/5.00 X 6 (R.R.–L.R.)	19	52364	E–Ring 5/8 Shaft
4	70301	Rim (R.R.–L.R.)	20	71208	Bushing
5	65139	Valve Stem (R.R.–L.R.)	21	72401	Kingpin – L.H.
6	59192	Valve Cap (R.R.–L.R.)	22	72400	Kingpin – R.H.
7	67349	Bolt, Hex Head 5/16–18 X 1 5/8 (R.R.–L.R.)	23	72358	Tie Bar
8	67818	Nut, Lock 5/16–18 (R.R.–L.R.)	24	55855	Bolt, Shoulder (Special) 5/16–24 (R.F.–L.F.)
9	52966	Washer, Flat Steel .765–1.250 X .060 (R.R.–L.R.)	25	68590	Nut, Lock 5/16–24 (R.F.–L.F.)
10	67703	Chain Adjuster	26	72359	Steering Plate
11	51447	Screw, Hex Head 5/16–18 X 7/8 (R.R.–L.R.)	27	71263	Screw, Hex Head Thread Cutting 5/16–18 X 1/2
12	72382	Bearing Cup (R.R.–L.R.)	28	53848	Washer, Flat Steel .630–1 X .031
13	62346	Bearing (R.R.–L.R.)	29	67350	Wheel and Tire Assembly 10.50 X 3.50 (R.F.–L.F.) (Incl. Ref. #30)
14	54922	Nut, Keps 5/16–18 (R.R.–L.R.)	30	64906	Bearing (R.F.–L.F.)
15	73523	Differential Assembly (See Page 28)			
16	72547	Steering Shaft			

ROPER 32" REAR ENGINE RIDING LAWN MOWER ELECTRIC START 8.0 H.P. MODEL NUMBER K8327AR

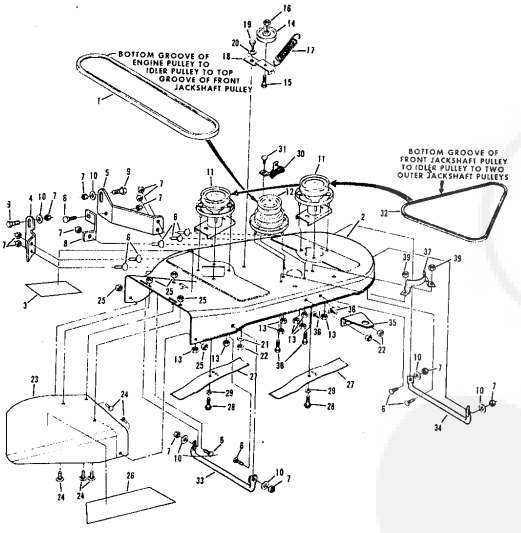

ROPER 32" REAR ENGINE RIDING LAWN MOWER ELECTRIC START 8.0 H.P. MODEL NUMBER K8327AR

Ref. No.	Part No.	Part Name	Ref. No.	Part No.	Part Name
1	74212	V–Belt	20	67356	Washer, Flat Steel .630–1 X .050
2	79296	Housing W/Silk Screening W/Decal (Incl. Ref. #3)	21	55611	Washer, Flat Steel .405–.860 X .172
3	75382	Decal – Housing	22	62336	Nut, Lock 3/8–16
4	74551	Housing Lifter – R.H.	23	71596	Discharge Guard
5	74552	Housing Lifter – L.H.	24	73383	Bolt, Carriage 1/4–20 X 5/8
6	59476	Bolt, Carriage 5/16–18 X 3/4	25	63601	Nut, Lock 1/4–20
7	63124	Nut, Lock 5/16–18	26	75085	Decal – Discharge Guard
8	74553	Strap	27	67405	Blade
9	58909	Bolt, Shoulder (Special) 5/16–18	28	67676	Screw, Machine Hex Head 3/8–24 X 7/8
10	50806	Washer, Flat Steel .328–.750 X .063	29	67354	Washer, Flat Steel .390–2.38 X .156
11	69542	Jackshaft Assembly – Driven	30	68107	Brake Assembly
12	69262	Jackshaft Assembly – Driver	31	73603	Bolt, Hex Head 3/8–16 X 5/8
13	55615	Nut, Keps 3/8–16	32	67398	V–Belt
14	67400	Idler Pulley	33	74548	Skid – R.H.
15	55918	Screw, Hex Head W/Lock Washer 3/8–16 X 1 1/2	34	74549	Skid – L.H.
			35	74550	Mower Support
16	51961	Nut, Lock 3/8–16	36	61306	Bolt, Carriage 3/8–16 X 3/4
17	67401	Spring	37	67404	Belt Snubber
18	67399	Idler Arm	38	54982	Screw, Hex Head 5/16–18 X 3/4
19	62361	Bolt, Shoulder (Special) 3/8–16	39	54922	Nut, Keps 5/16–18

ROPER 32" REAR ENGINE RIDING LAWN MOWER ELECTRIC START 8.0 H.P. MODEL NUMBER K8327AR

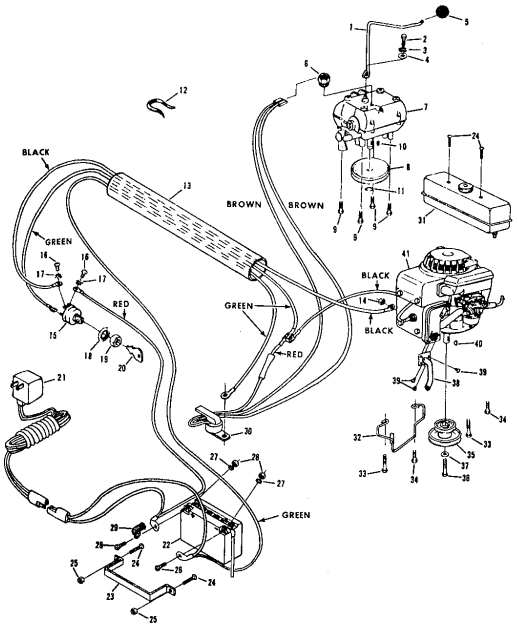

ROPER 32" REAR ENGINE RIDING LAWN MOWER ELECTRIC START 8.0 H.P. MODEL NUMBER K8327AR

Ref. No.	Part No.	Part Name	Ref. No.	Part No.	Part Name
1	75266	Shift Lever	24	58609	Screw, Machine 1/4–20 X 5 8
2	75346	Bolt, Hex Head 1/4–28 X 1/2	25	63601	Nut, Lock 1/4–20
3	5081	Washer, Lock 1/4	26		Screw, Hex Head 1/4–20 (Furnished With Battery Pack)
4	53847	Washer, Flat Steel .265–.750 X .063	27		Washer, Lock 1/4–20 (Furnished With Battery Pack)
5	55862	Knob	28		Nut, Lock 1/4–20 (Furnished With Battery Pack)
6	74525	Switch – Transmission	29	64422	Terminal Boot
7	794212	Transmission Assembly Model 143.719 (See Pages 30 and 31)	30	74530	Switch – Relay Module
8	73541	Pulley – Transmission	31	74099	Fuel Tank
9	54262	Screw, Machine Hex Head 5/16–18 X 7/8	32	72392	Belt Keeper
10	58349	Key, Woodruff #9	33	74996	Screw, Thread Form 5/16–18 X 1
11	65302	Retainer Ring 5/8 Shaft	34	55187	Screw, Hex Head Tapping 5/16–18 X 3/4
12	43174	Wire Tie	35	72388	Engine Pulley
13	74535	Wire Harness	36	68874	Screw, Machine 3/8–24 X 1 3/8
14	53490	Nut, Lock 1/4–20	37	62735	Washer, Flat Steel .375–1.250 X .201
15	72841	Ignition Switch (Incl. Ref. #16, 17,18,19,20)	38	75063	Exhaust Tube
16	67756	Screw, #10–32 X .31	39	36462	Screw, #8 Type AB X 3/8
17	67757	Washer, Lock Internal Tooth #10	40	52859	Key, Woodruff #61
18	67758	Washer, Lock Internal Tooth 5/8	41		Engine Model–VM80–150105D (Tecumseh Products Company) (8.0 H.P.)
19	67759	Nut, Hex 5/8–32		74569	Parts List – Owner's Manual
20	67760	Key Set (Pair)			
21	70452	Battery Charger			
22	70451	Battery Pack			
23	72706	Battery Strap			

ROPER 32" REAR ENGINE RIDING LAWN MOWER ELECTRIC START 8.0 H.P. MODEL NUMBER K8327AR

DIFFERENTIAL and AXLE ASSEMBLY PART NUMBER 73523

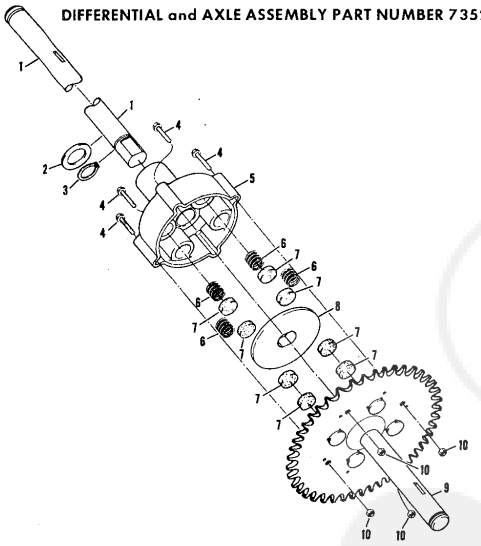

Ref. No.	Part No.	Part Name	Ref. No.	Part No.	Part Name
1	79099	Slip Axle	5	79022	Housing W/Bearings
2	78982	Washer, Thrust .751–1.250 X .0478	6	78979	Spring
3	58586	Retaining Ring	7	78978	Friction Block
4	79017	Screw, Machine Serrated Washer Head 5/16–24 – 2	8	78976	Drive Disc
			9	79100	Fixed Axle Assembly
			10	79018	Nut, Lock 5/16–24

ROPER 32" REAR ENGINE RIDING LAWN MOWER ELECTRIC START 8.0 H.P. MODEL NUMBER K8327AR

WIRING DIAGRAM

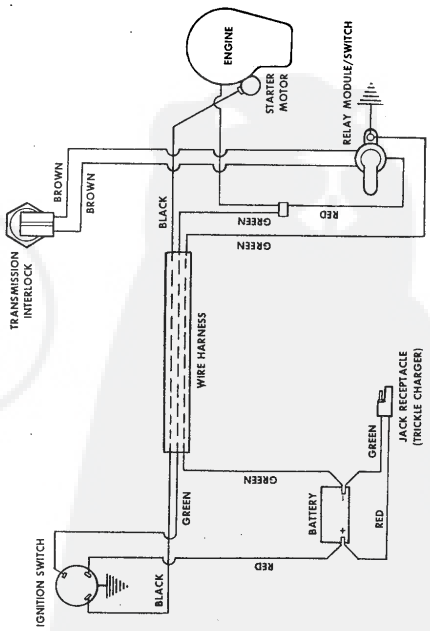

32" REAR ENGINE RIDING LAWN MOWER–MODEL NUMBER K8327BR

SCHEMATIC DIAGRAM

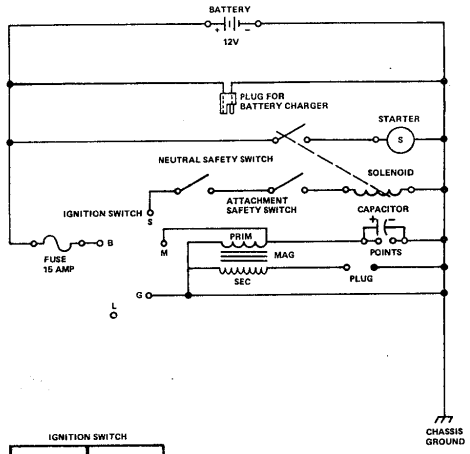

IGNITION SWITCH

POSITION	CIRCUIT
OFF	M–G
ON	B–L
START	B–S

REPAIR PARTS

32" REAR ENGINE RIDING LAWN MOWER–MODEL NUMBER K8327BR

DIFFERENTIAL ASSEMBLY PART NUMBER 2112J

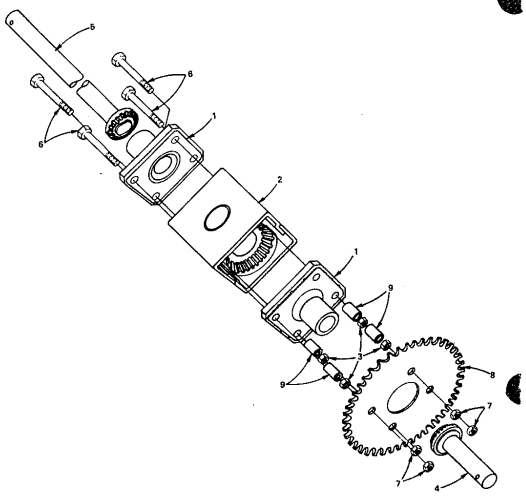

KEY NO.	PART NO.	DESCRIPTION
1	2308J	End Cap - Bearing Assembly
2	2309J	Transfer Gear Case Assembly
3	504P	Hex Nut - 5/16 - 18 UNC
4	2310J	Gear Shaft Assembly - Right
5	2311J	Gear Shaft Assembly - Left
6	3389P	Hex Bolt (Plated) 5/16 - 18 x 4 - 1/2
7	575P	Locknut - Gripco 5/16 - 18 UNC (Plated)
8	2312J	Sprocket
9	2313J	Spacer - Sprocket

REPAIR PARTS

32" REAR ENGINE RIDING LAWN MOWER–MODEL NUMBER K8327BR

STEERING AND ENCLOSURE GROUP

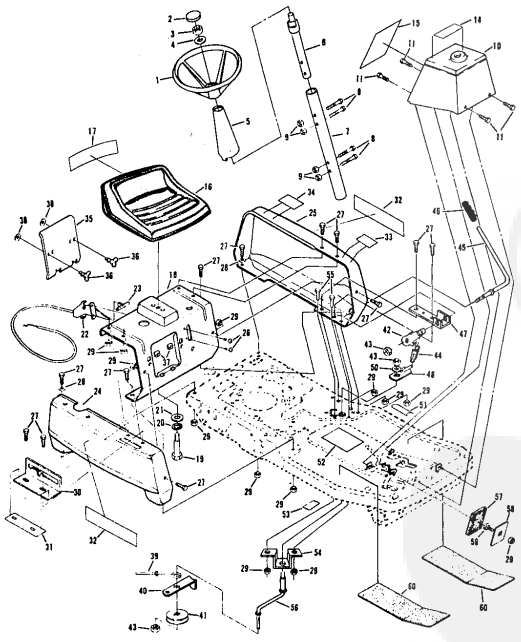

REPAIR PARTS

32" REAR ENGINE RIDING LAWN MOWER–MODEL NUMBER K8327BR

STEERING AND ENCLOSURE GROUP

KEY NO.	PART NO.	DESCRIPTION
1	74564	Steering Wheel
2	1114J	*Insert Cap
3	558P	*Jam Nut 1/2 - 20 UNF
4	1545P	Washer 17/32 x 1 x 16 Ga.
5	72705	Steering Shaft Cover
6	74566	Steering Shaft - Upper
7	74682	Steering Shaft Extension
8	3255P	*Bolt, Hex 1/4 - 20 x 1 - 1/4 Gr. 5
9	588P	Locknut with Washer Insert 1/4 - 20 UNC
10	74523	Console Assembly
11	3393P	Screw, Hex Thread Rolling 5/16 - 18 x 1/2
14	75122	Decal - Operating Instructions
15	74568	Decal - Instruction
16	1496J	Seat
17	75070	Decal - Seat
18	74963	Front Panel
19	72639	Bolt, Shoulder 1/2 - 13 UNC
20	1000P	*Lockwasher 1/2
21	1626P	Washer 17/32 x 1 - 3/16 x 12 Ga.
22	1544J	Throttle Control (Inc. Key No. 23)
23	61159	Knob - Remote Control
24	74534	Side Panel - R.H.
25	74532	Side Panel - L.H.
26	6547P	*Screw, Phillips Truss Hd. Thread Cut 1/4 - 20 x 3/4
27	3386P	Screw, Hex Washer Hd. Machine 5/16 - 18 x 3/4
28	1626P	Washer 11/32 x 1 - 1/8 x 16 Ga.
29	575P	*Locknut - Gripco 5/16 - 18 UNC
30	74531	Shifter Gate
31	74560	Decal - Shift
32	74601	Decal - Roper
33	74561	Decal - Blade Control
34	74512	Decal - Engine Area
35	72926	Battery Holder
36	73319	Wing Head Stud
37	73320	Receptacle
38	73321	Split Ring
39	72987	Blade Brake Rod
40	74544	Belt Keeper
41	53018	Idler Pulley
42	74613	Spring Arm
43	645P	*Locknut - Gripco 3/8 - 16 UNC
44	75045	Spring
45	74538	Blade Clutch Lever
46	71246	Grip
47	74539	Handle Bracket
48	75339	Control Arm Assembly
50	1639P	Washer 13/32 x 7/8 x 6 Ga.
51	74559	Decal - Enter and Exit
52	74557	Decal - Brake Instruction
53	376J	Decal - Clutch and Brake
54	74542	Idler Support Bracket
55	3010P	*Bolt, Hex 5/16 - 18 x 3/4
56	74543	Idler Arm
57	67365	Foot Pad
58	67189	Foot Pedal Plate
59	67613	Bolt, Carriage 5/16 - 18 x 3/4 Special
60	72384	Floor Board Pad
---	2086J	Fact and Warranty Tag
---	2078J	Owners Manual

*STANDARD HARDWARE–PURCHASE LOCALLY

REPAIR PARTS

32" REAR ENGINE RIDING LAWN MOWER--MODEL NUMBER K8327BR

CHASSIS

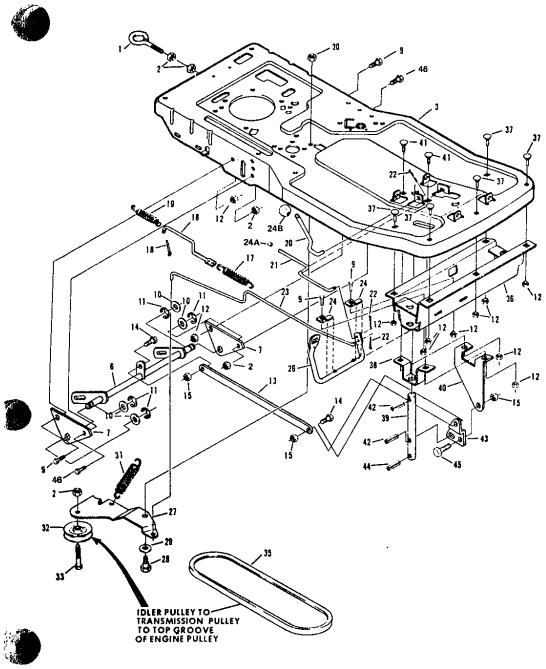

REPAIR PARTS

32" REAR ENGINE RIDING LAWN MOWER--MODEL NUMBER K8327BR

CHASSIS

KEY NO.	PART NO.	DESCRIPTION
1	70530	Tow Hitch - Eyebolt
2	545P	*Locknut, Gripco 3/8 - 16 UNC
3	74514	Chassis
6	75264	Lever Arm Assembly
7	75265	Side Bracket
9	3010P	*Bolt, Hex 5/16 - 18 x 3/4
10	1580P	Washer 21/32 x 1 x 16 Ga.
11	5001P	E-Ring
12	553P	*Locknut, Gripco 5/16 - 18 UNC Gr. 8
13	74545	Parallel Bar
14	67394	Bolt, Shoulder 5/16 - 18 x 3/4
15	580P	Locknut, Nylok 5/16 - 18 UNC
16	73798	Brake Rod - Rear
17	64284	Spring
18	2503P	*Cotter Pin 3/32 x 3/4
19	62755	Spring
20	74527	Lifter Handle
21	72391	Parking Brake Rod
22	63640	Cotter Pin 5/64 x 3/4
23	72393	Motion Clutch and Brake Rod
24	72390	Foot Pedal Clamp
24A	71673	Plunger Cap
24B	55862	Knob
26	72387	Foot Pedal
27	67174	Motion Idler
28	55855	Bolt, Shoulder 5/16 - 24 x 1/2
29	1628P	Washer 17/32 x 1 1/2 x 10 Ga.
30	580P	Nut, Nylok 5/16 - 24 UNF
31	2044J	Spring - Idler
32	63018	Pulley - Idler
33	6066P	Bolt, Hex with Semi Lockwasher 3/8 - 16 x 1 - 1/2
35	67346	V-Belt
36	72357	Front Member Assembly
37	67P	*Bolt, Carriage 5/16 - 18 x 3/4 Gr. 5
38	72375	Lifter Bracket
39	74516	Housing Lifter
40	74515	Bellcrank Bracket
41	68P	Bolt, Carriage 5/16 - 18 x 1 Gr. 5
42	74576	Drive Lok Pin - Type B
43	74522	Bellcrank
44	73446	Drive Lok Pin Type F
45	68475	Bolt, Shoulder 5/16 - 18 x 3/4
46	3021P	Bolt, Hex 3/8 - 16 x 3/4

*STANDARD HARDWARE--PURCHASE LOCALLY

REPAIR PARTS

32" REAR ENGINE RIDING LAWN MOWER--MODEL NUMBER K8327BR

WHEEL GROUP

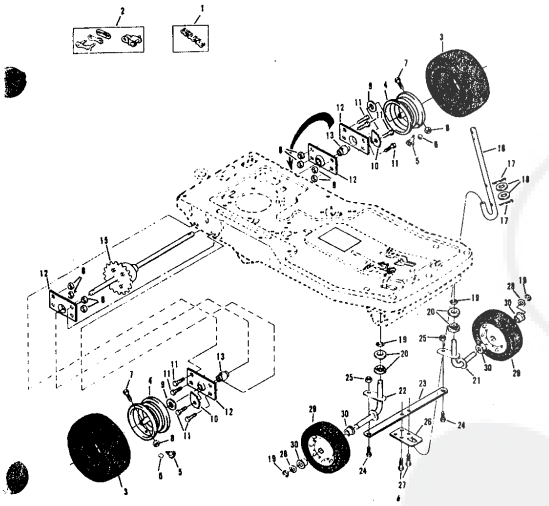

REPAIR PARTS

32" REAR ENGINE RIDING LAWN MOWER--MODEL NUMBER K8327BR

WHEEL GROUP

KEY NO.	PART NO.	DESCRIPTION
1	72818	Chain
2	60474	Repair Link Kit (Inc. Offset and Connecting Link)
3	70302	Tire 13 - 5.00 x 6
4	70301	Rim - Rear
5	65139	Valve Stem
6	59192	Valve Cap
7	3395P	*Bolt, Hex 5/16 - 18 x 1 - 5/8 Gr. 5
8	553P	*Locknut, Gripco 5/16 - 18 UNC Gr. 8
9	1617P	Washer 25/32 x 1 - 1/4 x 16 Ga.
10	67703	Chain Adjuster
11	6087P	Bolt, Hex with Sems Lockwasher 5/16 - 18 x 1
12	72382	Bearing Cup
13	62346	Bearing
15	2112J	Differential Assembly
16	72547	Steering Shaft
17	2506P	*Cotter Pin 1/8 x 1
18	1629P	Washer 21/32 x 1 - 1/4 x 16 Ga.
19	5001P	E-Ring
20	71208	Bearing
21	72401	Kingpin - L.H.
22	72400	Kingpin - R.H.
23	72358	Tie Bar
24	55855	Bolt, Shoulder - Special 5/16 - 24
25	582P	Locknut, Hex with Wesher Insert 5/16 - 24 UNF
26	72359	Steering Plate
27	3393P	Screw, Thread Rolling 5/16 - 18 x 1/2
28	1630P	Washer 21/32 x 1 x 21 Ga.
29	67350	Wheel and Tire Assembly 11.00 x 4.00 (Inc. Key No. 30)
30	64906	Bearing

*STANDARD HARDWARE--PURCHASE LOCALLY

REPAIR PARTS

32" REAR ENGINE RIDING LAWN MOWER--MODEL NUMBER K8327BR

MOWER

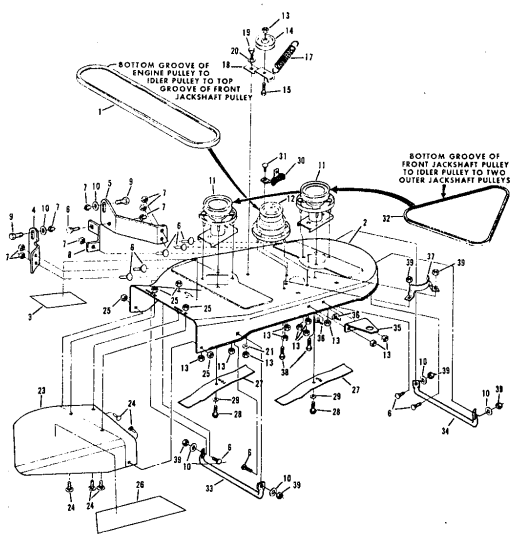

REPAIR PARTS

32" REAR ENGINE RIDING LAWN MOWER--MODEL NUMBER K8327BR

MOWER

KEY NO.	PART NO.	DESCRIPTION	KEY NO.	PART NO.	DESCRIPTION
1	74212	V-Belt	21	1622P	Washer, 13/32 x 7/8 x 7 Ga.
2	79293	Housing with Silk Screening	23	71696	Discharge Guard
3	75382	Decal - Cutter Head	24	70P	*Bolt, Carriage 1/4 - 20 x 3/4 Gr. 5
4	74551	Housing Lifter - R.H.	25	566P	Locknut, Gripco 1/4 - 20 UNC
5	74552	Housing Lifter - L.H.	26	75085	Decal - Discharge Guard
6	67P	*Bolt, Carriage 5/16 - 18 x 3/4 Gr. 5	27	67405	Blade
7	589P	Locknut, Nylok 5/16 - 18 UNC	28	6062P	*Screw, Hex Machine w/Sems Lockwasher
8	74553	Strap			Nylon Patch 3/8 - 24 x 7/8 Gr. 5
9	58909	Bolt, Shoulder - Special	29	1631P	Washer 13/32 x 2 - 3/8 x 10 Ga.
10	50806	*Washer 11/32 x 3/4 x 16 Ga.	30	68107	Brake Assembly
11	71633	Jackshaft Assembly - Driven	31	3021P	*Bolt, Hex 3/8 - 16 x 3/4
12	69262	Jackshaft Assembly - Driver	32	67398	V-Belt
13	545P	Locknut, Gripco 3/8 - 16 UNC	33	74548	Skid - R.H.
14	67400	Idler Pulley	34	74549	Skid - L.H.
15	6066P	Bolt, Hex with Sems Lockwasher	35	74550	Mower Support
		3/8 - 16 x 1 - 1/2	36	19P	*Bolt, Carriage 3/8 - 16 x 3/4
17	67401	Spring	37	67404	Belt Snubber
18	67399	Idler Arm	38	6052P	Screw, Hex Head with Sems
19	62361	Bolt, Shoulder - Special			Lockwasher 5/16 - 18 x 3/4
20	67358	Washer - Special	39	553P	Locknut, Gripco 5/16 - 18 UNC

*STANDARD HARDWARE--PURCHASE LOCALLY

REPAIR PARTS

32" REAR ENGINE RIDING LAWN MOWER--MODEL NUMBER K8327BR

ELECTRICAL

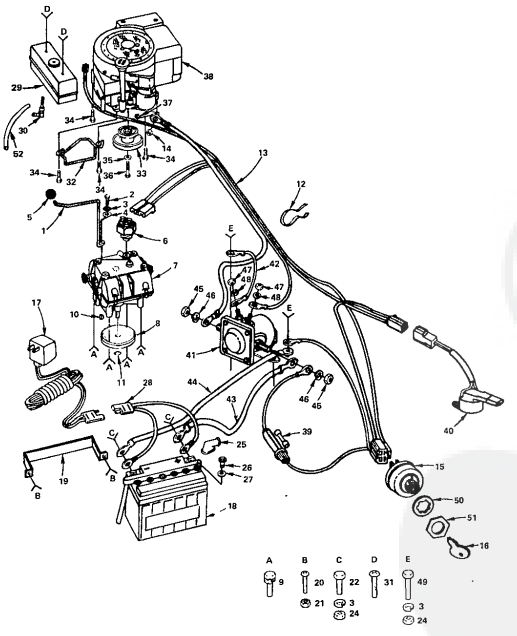

REPAIR PARTS

32" REAR ENGINE RIDING LAWN MOWER--MODEL NUMBER K8327BR

ELECTRICAL

KEY NO.	PART NO.	DESCRIPTION	KEY NO.	PART NO.	DESCRIPTION
1	75266	Shift Lever	28	600J	Charger Plug Assembly
2	3396P	Bolt, Hex 1/4 - 28 x 1/2 Gr. 5	29	742J	Fuel Tank
3	1002P	Lockwasher 1/4	30	739J	Fuel Tank Elbow
4	1507P	Washer 9/32 x 3/4 x 16 Ga.	31	3358P	Screw, Truss Hd. Phillips 1/4 - 20 x 5/8
5	55862	Knob	32	677A201	Belt Keeper Assembly
6	74525	Switch - Transmission	33	2198J	Engine Pulley
7	794212A	Transmission Assembly (719A)	34	5608P	Screw, Hex Hd. Thd. Rolling
8	73641	Pulley - Transmission			3/8 - 16 x 1 - 1/2
9	6066P	Bolt w/Sems Lockwasher 5/16 - 18	35	1634P	Washer 3/8 x 1 - 1/4 x 7 Ga.
		x 5/8	36	6070P	Screw, Hex Hd. w/Sems Lockwasher
10	58349	Key, Woodruff No. 9			3/8 - 24 x 1 - 3/8 Nylon Patch Gr. 5
11	65302	Retaining Ring	37	65053	Key, Woodruff No. 6
12	43174	Wire Tie	38	191705	Engine, 8 H.P. Briggs & Stratton Type
13	2081J	Wire Harness			No. 5647-01
14	53410	Locknut 1/4 - 20	39	6347R	Fuse - 30 Amp.
15	4406R	Ignition Switch	40	2093J	Safety Switch
16	7552H	Key	41	7754R	Solenoid
17	70452	Battery Charger	42	8037R	Wire, Solenoid Ground
18	70451	Battery Pack	43	669J	Cable Assembly (Battery to Solenoid)
19	72706	Battery Strap	44	2098J	Cable Assembly (Battery to Ground)
20	3397P	Screw, Truss Hd. Phillips	45	589P	Nut, Hex 5/16 - 24 UNF
		1/4 - 20 x 1/2	46	1007P	Lockwasher 5/16
21	588P	Locknut, 1/4 - 20 UNC w/Washer Inset	47	543P	Nut, Hex No. 10 - 32
22	3114P	Screw, Hex Head 1/4 - 20 x 1/2	48	1006P	Lockwasher No. 10
		(Furnished w/Battery Pack)	49	3003P	Bolt, Hex 1/4 - 20 x 3/4
24	503P	Hex Nut 1/4 - 20	50	67758	Lockwasher, Internal Tooth 5/8
25	719J	Terminal Boot	51	67759	Nut 5/8 - 32 UNF
26	2223J	Cap - Battery	52	2316J	Fuel Line
27	2224J	Gasket - Battery			

REPAIR PARTS

32" REAR ENGINE RIDING LAWN MOWER–MODEL NUMBER K8327BR
TRANSMISSION MODEL NUMBER 719A

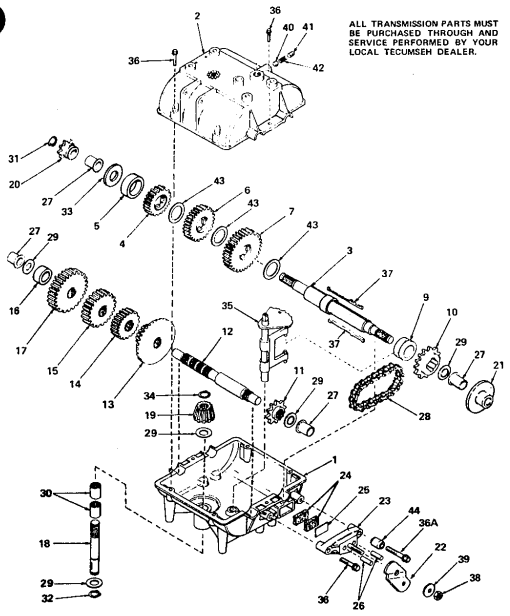

ALL TRANSMISSION PARTS MUST BE PURCHASED THROUGH AND SERVICE PERFORMED BY YOUR LOCAL TECUMSEH DEALER.

REPAIR PARTS

32" REAR ENGINE RIDING LAWN MOWER–MODEL NUMBER K8327BR
TRANSMISSION MODEL NUMBER 719A

KEY NO.	PART NO.	DESCRIPTION
	784212A	Complete Transmission (719A)
1	770081	Case, Transmission
2	772070	Cover, Transmission
3	776162	Shaft, Output and Brake
4	778121	Gear, Spur (20 teeth)
5	786072	Spacer
6	778123	Gear, Spur (25 teeth)
7	778124	Gear, Spur (30 teeth)
9	784266	Collar, Shift
10	786083	Sprocket (18 teeth)
11	786082	Sprocket (9 teeth)
12	776134	Shaft, Counter
13	778109	Gear, Bevel (42 tooth and 15 tooth spur gear)
14	778126	Gear, Spur (20 teeth)
15	778127	Gear, Spur (25 teeth)
16	786071	Spacer
17	778129	Gear, Spur (30 teeth)
18	776135	Shaft, Input
19	778113	Bevel pinion, Input
20	786047	Sprocket (8 teeth)
21	790003	Disk, Brake
22	790004	Lever, Brake
23	790005	Holder, Brake pad
24	790006	Pad, Brake
25	790007	Plate, Brake pad
26	786026	Pin, Dowel
27	780105	Bushing, Flanged
28	786081	Chain, Roller (No. 41 chain, 24 links)
29	780072	Race, Thrust
30	780106	Bearing, Needle
31	792072	Ring, Retaining
32	792035	Ring, Retaining
33	780109	Washer
34	788040	Ring, Retaining
35	784270	Rod & Fork Assy., Shift
36	792073	Screw, Hex hd. taptite, 1/4 - 20 x 1 - 1/4
36A	792085	Screw, Hex hd. taptite, 1/4 - 20 x 2 - 1/4
37	792089A	Key
38	792075	Nut, 5/16 - 24 lock
39	792076	Washer, Flat, 5/16
40	792077	Ball, Steel, 5/16"
41	792078	Screw, Set, 3/8 - 16 x 3/8
42	792079	Spring
43	780108	Washer, Thrust
44	786067	Spacer

REPAIR PARTS

32" REAR ENGINE RIDING LAWN MOWER–MODEL NUMBER K8327BR
BRIGGS & STRATTON 8 H.P. ENGINE–MODEL NO. 191705, TYPE NO. 5647-01

CYLINDER, CRANKSHAFT AND ENGINE BASE GROUP

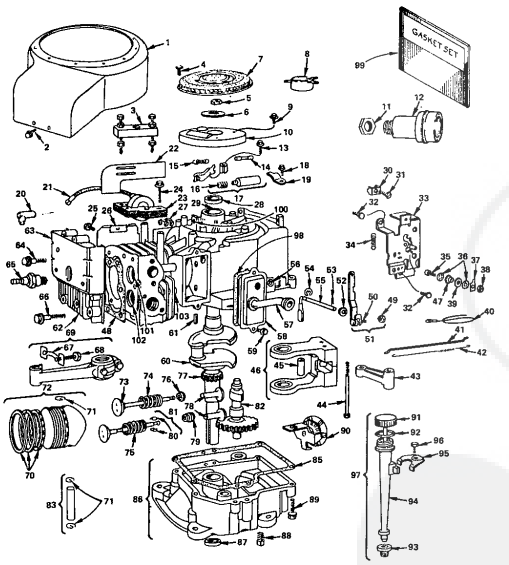

ALL ENGINE PARTS MUST BE PURCHASED THROUGH AND SERVICE PERFORMED BY YOUR LOCAL BRIGGS AND STRATTON DEALER.

REPAIR PARTS

32" REAR ENGINE RIDING LAWN MOWER–MODEL NUMBER K8327BR
BRIGGS & STRATTON 8 H.P. ENGINE–MODEL NO. 191705, TYPE NO. 5647-01

CYLINDER, CRANKSHAFT AND ENGINE BASE GROUP

KEY NO.	PART NO.	DESCRIPTION
1	391379	Housing - Blower
2	93158	Screw - Sem
3	19165	Puller - Flywheel
4	93805	Screw - Sem
5	92284	Nut - Flywheel
6	220865	Washer - Spring
7	222562	Screen - Flush Rotating
8	222561	Cup - Screen Mtg.
9	93705	Screw - Sem
10	222117	Cover - Breaker Point
11	91242	Locknut - Muffler
12	393010	Muffler - Exhaust
13	93381	Screw - Breaker Arm
14	65704	Plunger - Breaker Point
15	26018	Spring - Breaker Arm
16	260274	Spring - Connector
17	294628	Breaker Points & Condenser (Inc. Key No's. 15 & 16)
18	93042	Screw - Sem
19	220477	Clamp - Condenser
20	66538	Elbow - Spark Plug
21	221798	Terminal - Ignition Cable
22	221760	Guide - Air
23	298968	Armature Ass'y.
24	93381	Screw - Armature
25	93103	Screw - Sem
26	222830	Shield - Cylinder
27	221907	Clip - Wire
28	294606	Oil Seal
29	393675	Cylinder Assembly
30	221535	Clamp - Casing
31	93486	Screw - Sem
32	93572	Screw
33	390662	Plate - Governor Control
34	261306	Spring - Governor
35	91920	Screw - Terminal
36	92791	Lockwasher
37	93722	Terminal - Spade
38	90578	Hex Nut No. 8 - 32
39	66068	Washer - Insulating
40	299500	Wire - Ground
41	260971	Link - Governor
42	260584	Spring - Governor Link
43	212359	Link - Counterweight
44	93874	Screw - Counterweight
45	298009	Pin - Counterweight
46	390172	Counterweight Ass'y.
47	66554	Collar - Insulating
48	270430	*Gasket - Cylinder Head
49	231082	Hex Nut No. 10 - 24
50	92613	Bolt - Governor Lever
51	391733	Lever Ass'y. - Governor (Inc. Key No's. 49 & 50)
52	222450	Washer - Governor Lever
53	93306	Cotter - Hair Pin
54	93307	Retainer - E-Ring
55	231058	Crank - Governor
56	231055	Bushing - Governor Crank
57	280005	Breather Tube
58	391406	Breather Ass'y.
59	93536	Sems Screw
60	391757	Crankshaft
61	61760	Key - Flywheel
62	212286	Cylinder Head
63	222636	Cover - Cylinder Head
64	93211	Screw - 2 - 21/32"
65	293918	Spark Plug Resistor
66	93723	Screw - 3"
67	222114	Lock - Connecting Rod Screw
68	92659	Screw - Connecting Rod
69	390402	Rod Ass'y. - Connecting (Inc. Key No's. 67 & 68)
70	391669	RING SET - PISTON - Std.
	391670	.010 Oversize
	391671	.020 Oversize
	391672	.030 Oversize
71	68546	Lock - Piston Pin
72	391673	Piston Ass'y. (Inc. Key No's. 70 & 71)
	391674	.010 Oversize
	391675	.020 Oversize
	391676	.030 Oversize
73	261055	Intake Valve
74	65906	Spring - Intake Valve
75	26828	Spring - Exhaust Valve
76	221596	Retainer - Intake Valve
77	261195	Gear - Timing
78	260933	Tappet - Valve
79	292260	Rotocoil - Exhaust Valve
80	93630	Retainer - Exhaust Valve
81	390419	Exhaust Valve (Inc. Key No. 80)
82	211689	Gear - Cam
83	295840	Pin Ass'y. - Piston (Inc. (2) each Key No. 71)
	295841	Pin Ass'y. - Piston .005 Oversize
85	27750	*Gasket - Crankcase Cover - 1/64" thick
	27876	Gasket - Crankcase Cover - .005" thick
	27877	Gasket - Crankcase Cover - .008" thick
86	298616	Oil Sump (Inc. Key No's. 85 and 87)
87	298423	Oil Seal
88	91084	Plug - Oil Drain
89	93585	Screw - Sem
90	392718	Oil Slinger - Governor
91	391840	Cap & Dipstick - Oil Filler
92	270920	Seal - Filler Cap
93	68838	Seal - Filler Tube
94	280133	Tube - Oil Filler
95	222502	Clamp - Oil Filler Tube
96	93804	Screw - Clamp Mtg.
97	392066	Filler Group - Oil (Inc. Key No's. 91, 92, 93, 94, 95 & 96)
98	27803	*Gasket - Valve Cover
99	299577	Gasket Set
100	23513	Bushing - Plunger
101	211661	Seat - Intake Valve (Std.)
102	211661	Seat - Exhaust Valve (Std.)
103	230665	Guide - Exhaust Valve

*INCLUDED IN GASKET SET 299577

SPARK ARRESTER ASSEMBLY (OPTIONAL)

	291913	Spark Arrester
	222537	Deflector
	93705	Screw (4 required)

REPAIR PARTS

32" REAR ENGINE RIDING LAWN MOWER--MODEL NUMBER K8327BR
BRIGGS & STRATTON 8 H.P. ENGINE--MODEL NO. 191705, TYPE NO. 5647-01

CARBURETOR NUMBER 390811

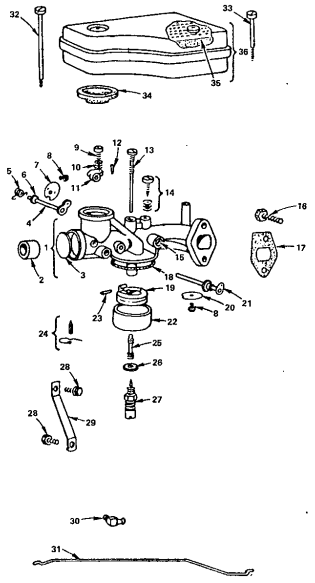

ALL ENGINE PARTS MUST BE PURCHASED THROUGH AND SERVICE PERFORMED BY YOUR LOCAL BRIGGS AND STRATTON DEALER.

REPAIR PARTS

32" REAR ENGINE RIDING LAWN MOWER--MODEL NUMBER K8327BR
BRIGGS & STRATTON 8 H.P. ENGINE--MODEL NO. 191705, TYPE NO. 5647-01

CARBURETOR NUMBER 390811

KEY NO.	PART NO.	DESCRIPTION
1	299851	Body Ass'y. (Includes Key No. 3)
2	211682	Venturi - Carburetor
3	221997	*Plug - Welch
4	390684	Shaft and Lever - Choke
5	261116	Spring - Choke Return
6	270382	Washer - Choke Shaft
7	222010	Valve - Choke
8	93499	Screw - Sem
9	91920	Screw - Fil. Hd. Mach. No. 8 - 32 x 5/8
10	26157	Spring - Throttle Adjustment
11	211712	Stop - Throttle
12	93043	Pin - Throttle Stop
13	299740	*Nozzle - Carburetor
14	292681	*Valve Ass'y. - Carb. Idle
15	23108	Bushing - Throttle Shaft
16	93357	Screw - Carburetor Mtg.
17	270824	*Gasket - Carburetor Mtg.
18	270511	*Gasket - Float Bowl
19	299707	Float - Carburetor
20	221986	Valve - Throttle
21	391512	Shaft & Lever - Throttle
22	221995	Bowl - Float
23	230896	*Pin - Float Hinge
24	299096	*Valve - Fuel Inlet
25	230932	*Screw - Nozzle
26	222014	*Washer - Float Bowl
27	391233	*Valve - Needle
28	93572	Screw
29	222027	Bracket - Carburetor
30	67218	Connector - Fuel Pipe
31	261117	Link - Choke
32	93323	Screw - Air Cleaner
33	93622	Screw - Air Cleaner
34	270539	Gasket - Air Cleaner
35	270528	Element - Air Cleaner
36	391399	Air Cleaner Ass'y. (Inc. Key No 35)
	299852	Carburetor Overhaul Kit (Inc. Parts Marked *)
	390811	Carburetor Assembly

REPAIR PARTS

32" REAR ENGINE RIDING LAWN MOWER--MODEL NUMBER K8327BR
BRIGGS & STRATTON 8 H.P. ENGINE--MODEL NO. 191705, TYPE NO. 5647-01

FLYWHEEL AND STARTER MOTOR GROUP

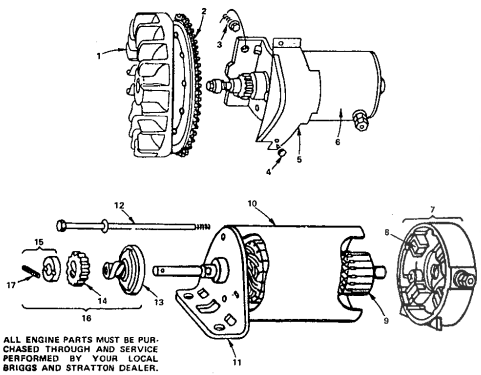

ALL ENGINE PARTS MUST BE PURCHASED THROUGH AND SERVICE PERFORMED BY YOUR LOCAL BRIGGS AND STRATTON DEALER.

KEY NO.	PART NO.	DESCRIPTION
1	392034	Flywheel and Ring Gear Ass'y.
2	392134	Gear - Ring
3	93523	Screw - Sem
4	93410	Screw - Sem
5	390233	Cover & Shield - Starter
6	392749	Motor, Starter (Inc. Key No's. 7 thru 17)
7	390846	End Cap Ass'y. Commutator (Inc. Key No. 8)
8	391705	Brush Ass'y.
9	392747	Armature Ass'y.
10	392744	Housing Ass'y.
11	392061	End Cap Ass'y. Drive
12	391706	Thru Bolt Ass'y.
13	391135	Clutch Ass'y.
14	280104	Gear
15	391462	Retainer & Pin (Inc. Key No. 17)
16	391461	Drive Ass'y. (Inc. Key No's. 13,14 & 15)
17	93754	Roll Pin

32" REAR ENGINE RIDING LAWN MOWER--MODEL NUMBER K8327CR
SCHEMATIC DIAGRAM

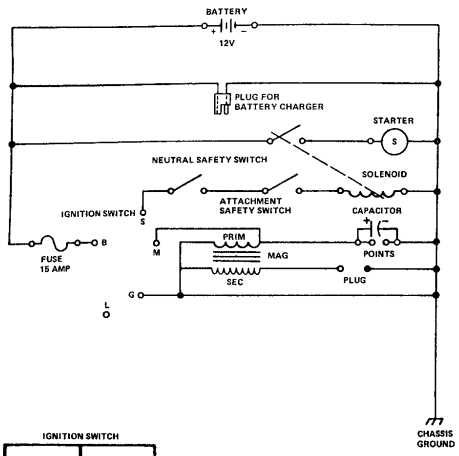

IGNITION SWITCH

POSITION	CIRCUIT
OFF	M–G
ON	B–L
START	B–S

REPAIR PARTS

32" REAR ENGINE RIDING LAWN MOWER--MODEL NUMBER K8327CR
DIFFERENTIAL ASSEMBLY PART NUMBER 2112J

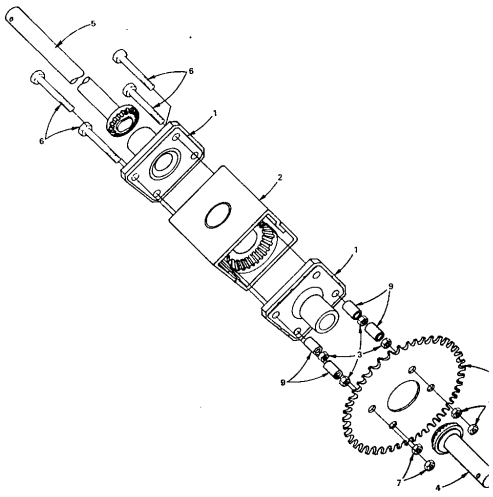

KEY NO.	PART NO.	DESCRIPTION
1	2308J	End Cap - Bearing Assembly
2	2309J	Transfer Gear Case Assembly
3	504P	Hex Nut - 5/16 - 18 UNC
4	2310J	Gear Shaft Assembly - Right
5	2311J	Gear Shaft Assembly - Left
6	3389P	Hex Bolt (Plated) 5/16 - 18 x 4 - 1/2
7	579P	Locknut - Gripco 5/16 - 18 UNC (Plated)
8	2312J	Sprocket
9	2313J	Spacer - Sprocket

REPAIR PARTS

32" REAR ENGINE RIDING LAWN MOWER--MODEL NUMBER K8327CR
STEERING AND ENCLOSURE GROUP

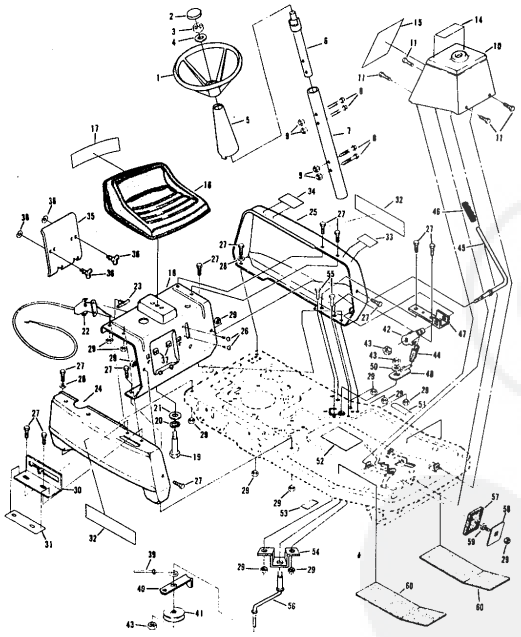

REPAIR PARTS

32" REAR ENGINE RIDING LAWN MOWER--MODEL NUMBER K8327CR
STEERING AND ENCLOSURE GROUP

KEY NO.	PART NO.	DESCRIPTION
1	74564	Steering Wheel
2	1114J	Insert Cap
3	568P	*Jam Nut 1/2 - 20 UNF
4	1545P	Washer 17/32 x 1 x 16 Ga.
5	72705	Steering Shaft Cover
6	74566	Steering Shaft - Upper
7	74682	Steering Shaft Extension
8	3255P	*Bolt, Hex 1/4 - 20 x 1 - 1/4 Gr. 5
9	588P	Locknut with Washer Insert 1/4 - 20 UNC
10	74523	Console Assembly
11	3393P	Screw, Hex Thread Rolling 5/16 - 18 x 1/2
14	75122	Decal - Operating Instructions
15	74558	Decal - Instruction
16	1406J	Seat
17	75070	Decal - Seat
18	7496G	Front Panel
19	72639	Bolt, Shoulder 1/2 - 13 UNC
20	1000P	*Lockwasher 1/2
21	1625P	Washer 17/32 x 1 - 3/16 x 12 Ga.
22	1544J	Throttle Control (Inc. Key No. 23)
23	61159	Knob - Remote Control
24	74534	Side Panel - R.H.
25	74532	Side Panel - L.H.
26	5547P	*Screw, Phillips Truss Hd. Thread Cut 1/4 - 20 x 3/4
27	3386P	Screw, Hex Washer Hd. Machine 5/16 - 18 x 3/4
28	1626P	Washer 11/32 x 1 - 1/8 x 16 Ga.
29	575P	*Locknut - Gripco 5/16 - 18 UNC
30	74531	Shifter Gate
31	74560	Decal - Shift
32	74561	Decal - Roper
33	74581	Decal - Blade Control
34	74512	Decal - Engine Area
35	72926	Battery Holder
36	73319	Wing Head Stud
37	73320	Receptacle
38	73321	Split Ring
39	72987	Blade Brake Rod
40	74544	Belt Keeper
41	53018	Idler Pulley
42	74613	Spring Arm
43	545P	*Locknut - Gripco 3/8 - 16 UNC
44	75045	Spring
45	74538	Blade Clutch Lever
46	71246	Grip
47	74539	Handle Bracket
48	75339	Control Arm Assembly
50	1636P	Washer 13/32 x 7/8 x 6 Ga.
51	74559	Decal - Enter and Exit
52	74557	Decal - Brake Instruction
53	376J	Decal - Clutch and Brake
54	74542	Idler Support Bracket
55	3010P	*Bolt, Hex 5/16 - 18 x 3/4
56	74543	Idler Arm
57	67365	Foot Pad
58	67189	Foot Pedal Plate
59	67613	Bolt, Carriage 5/16 - 18 x 3/4 Specia
60	72384	Floor Board Pad
---	2079J	Owners Manual

*STANDARD HARDWARE--PURCHASE LOCAL

REPAIR PARTS

32" REAR ENGINE RIDING LAWN MOWER--MODEL NUMBER K8327CR

CHASSIS

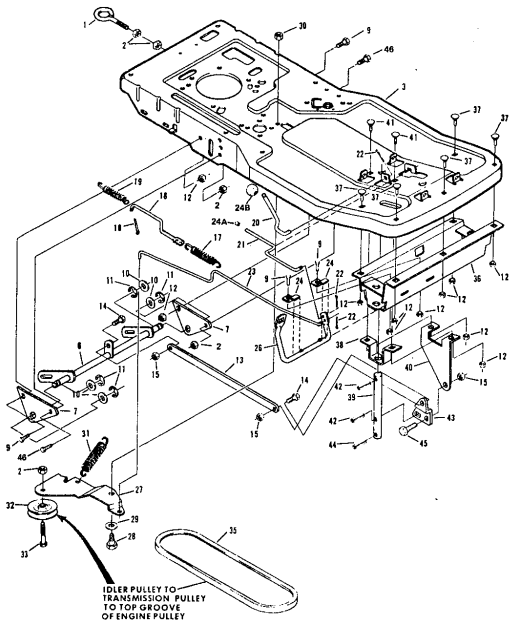

REPAIR PARTS

32" REAR ENGINE RIDING LAWN MOWER--MODEL NUMBER K8327CR

CHASSIS

KEY NO.	PART NO.	DESCRIPTION
1	70530	Tow Hitch - Eyebolt
2	546P	*Locknut, Gripco 3/8 - 16 UNC
3	74514	Chassis
6	75264	Lever Arm Assembly
7	75265	Side Bracket
9	3010P	*Bolt, Hex 5/16 - 18 x 3/4
10	1580P	Washer 21/32 x 1 x 16 Ga.
11	5001P	E-Ring
12	553P	*Locknut, Gripco 5/16 - 18 UNC Gr. B
13	74545	Parallel Bar
14	67394	Bolt, Shoulder 5/16 - 18 x 3/4
15	580P	Locknut, Nylok 5/16 - 18 UNC
16	73798	Brake Rod - Rear
17	64284	Spring
18	2503P	*Cotter Pin 3/32 x 3/4
19	62755	Spring
20	74527	Lifter Handle
21	72361	Parking Brake Rod
22	63640	Cotter Pin 5/64 x 3/4
23	72393	Motion Clutch and Brake Rod
24	72360	Foot Pedal Clamp
24A	71673	Plunger Cap
24B	55862	Knob
26	72387	Foot Pedal
27	67174	Motion Idler
28	55855	Bolt, Shoulder 5/16 - 24 x 1/2
29	1629P	Washer 17/32 x 1 - 1/2 x 10 Ga.
30	586P	Nut, Nylok 5/16 - 24 UNF
31	2044J	Spring - Idler
32	53018	Pulley - Idler
33	6066P	Bolt, Hex with Sems Lockwasher 3/8 - 16 x 1 - 1/2
35	67346	V-Belt
36	72357	Front Member Assembly
37	67P	*Bolt, Carriage 5/16 - 18 x 3/4 Gr. 5
38	72375	Lifter Bracket
39	74516	Housing Lifter
40	74515	Bellcrank Bracket
41	68P	Bolt, Carriage 5/16 - 18 x 1 Gr. 5
42	74576	Drive Lok Pin - Type B
43	74522	Bellcrank
44	73446	Drive Lok Pin Type F
45	68475	Bolt, Shoulder 5/16 - 18 x 3/4
46	3021P	Bolt, Hex 3/8 - 16 x 3/4

*STANDARD HARDWARE-PURCHASE LOCALLY

REPAIR PARTS

32" REAR ENGINE RIDING LAWN MOWER--MODEL NUMBER K8327CR

WHEEL GROUP

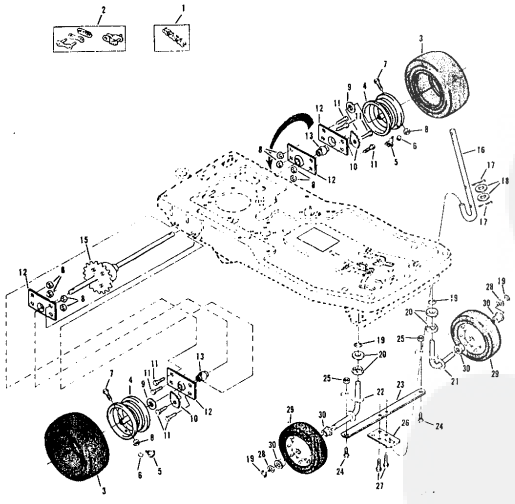

REPAIR PARTS

32" REAR ENGINE RIDING LAWN MOWER--MODEL NUMBER K8327CR

WHEEL GROUP

KEY NO.	PART NO.	DESCRIPTION
1	72818	Chain
2	60474	Repair Link Kit (Inc. Offset and Connecting Link)
3	70302	Tire 13 - 5.00 x 6
4	70301	Rim - Rear
5	65139	Valve Stem
6	59192	Valve Cap
7	3395P	*Bolt, Hex 5/16 - 18 x 1 - 5/8 Gr. 5
8	553P	*Locknut, Gripco 5/16 - 18 UNC Gr. B
9	1617P	Washer 25/32 x 1 - 1/4 x 16 Ga.
10	67703	Chain Adjuster
11	6067P	Bolt, Hex with Sems Lockwasher 5/16 - 18 x 1
12	72382	Bearing Cup
13	62346	Bearing
15	2112J	Differential Assembly
16	72547	Steering Shaft
17	2508P	*Cotter Pin 1/8 x 1
18	1629P	Washer 21/32 x 1 - 1/4 x 16 Ga.
19	5001P	E-Ring
20	71208	Bearing
21	72401	Kingpin - L.H.
22	72400	Kingpin - R.H.
23	72358	Tie Bar
24	55855	Bolt, Shoulder - Special 5/16 - 24
25	582P	Locknut, Hex with Washer Insert 5/16 - 24 UNF
26	72359	Steering Plate
27	3393P	Screw, Thread Rolling 5/16 - 18 x 1/2
28	1630P	Washer 21/32 x 1 x 21 Ga.
29	67350	Wheel and Tire Assembly 11.00 x 4.00 (Inc. Key No. 30)
30	64906	Bearing

*STANDARD HARDWARE-PURCHASE LOCALLY

REPAIR PARTS

32" REAR ENGINE RIDING LAWN MOWER--MODEL NUMBER K8327CR

MOWER

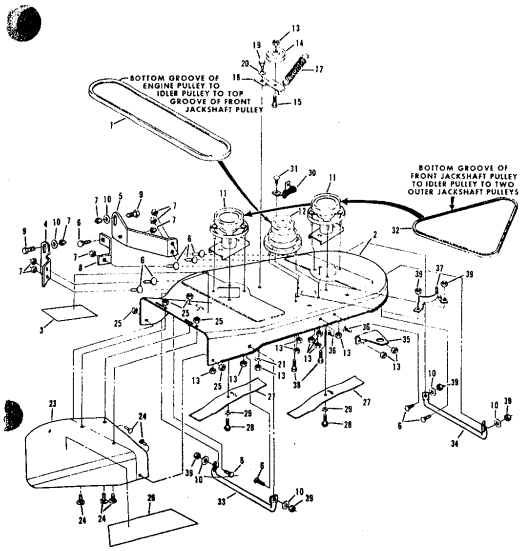

REPAIR PARTS

32" REAR ENGINE RIDING LAWN MOWER--MODEL NUMBER K8327CR

MOWER

KEY NO.	PART NO.	DESCRIPTION
1	74212	V-Belt
2	79293	Housing with Silk Screening
3	75382	Decal - Cutter Head
4	74551	Housing Lifter - R.H.
5	74552	Housing Lifter - L.H.
6	67P	*Bolt, Carriage 5/16 - 18 x 3/4 Gr. 5
7	580P	Locknut, Nylok 5/16 - 18 UNC
8	74553	Strap
9	58909	Bolt, Shoulder - Special
10	50806	*Washer 11/32 x 3/4 x 16 Ga.
11	71633	Jackshaft Assembly - Driven
12	69262	Jackshaft Assembly - Driver
13	545P	Locknut, Gripco 3/8 - 16 UNC
14	67400	Idler Pulley
15	6066P	Bolt, Hex with Sems Lockwasher 3/8 - 16 x 1 - 1/2
17	67401	Spring
18	67399	Idler Arm
19	62361	Bolt, Shoulder - Special
20	67356	Washer - Special
21	1622P	Washer, 13/32 x 7/8 x 7 Ga.
23	71596	Discharge Guard
24	70P	*Bolt, Carriage 1/4 - 20 x 3/4 Gr. 5
25	560P	Locknut, Gripco 1/4 - 20 UNC
26	70085	Decal - Discharge Guard
27	67405	Blade
28	6062P	Screw, Hex Machine w/Sems Lockwashur Nylon Patch 3/8 - 24 x 7/8 Gr. 5
29	1631P	Washer 13/32 x 2 - 3/8 x 10 Ga.
30	68107	Brake Assembly
31	3021P	*Bolt, Hex 3/8 - 16 x 3/4
32	67398	V-Belt
33	74548	Skid - R.H.
34	74549	Skid - L.H.
35	74550	Mower Support
36	19P	*Bolt, Carriage 3/8 - 16 x 3/4
37	67404	Belt Snubber
38	6052P	Screw, Hex Head with Sems Lockwasher 5/16 - 18 x 3/4
39	553P	Locknut, Gripco 5/16 - 18 UNC

*STANDARD HARDWARE--PURCHASE LOCALLY

REPAIR PARTS

32" REAR ENGINE RIDING LAWN MOWER--MODEL NUMBER K8327CR

ELECTRICAL

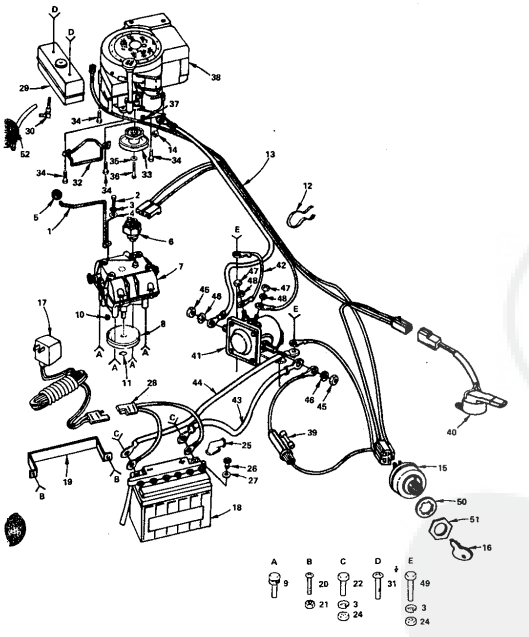

REPAIR PARTS

32" REAR ENGINE RIDING LAWN MOWER--MODEL NUMBER K8327CR

ELECTRICAL

KEY NO.	PART NO.	DESCRIPTION
1	75266	Shift Lever
2	3396P	Bolt, Hex 1/4 - 28 x 1/2 Gr. 5
3	1002P	Lockwasher 1/4
4	1507P	Washer 9/32 x 3/4 x 16 Ga.
5	55862	Knob
6	74525	Switch - Transmission
7	794212A	Transmission Assembly (719A)
8	73541	Pulley - Transmission
9	6069P	Bolt w/Sems Lockwasher 5/16 - 18 x 5/8
10	58349	Key, Woodruff No. 9
11	65302	Retaining Ring
12	43174	Wire Tie
13	2081J	Wire Harness
14	53490	Locknut 1/4 - 20
15	4408H	Ignition Switch
16	7552H	Key
17	71803	Battery Charger
18	70451	Battery Pack
19	72706	Battery Strap
20	3307P	Screw, Truss Hd. Phillips 1/4 - 20 x 1/2
21	588P	Locknut, 1/4 - 20 UNC w/Washer Inset
22	3114P	Screw, Hex Head 1/4 - 20 x 1/2 (Furnished w/Battery Pack)
24	503P	Hex Nut 1/4 - 20
25	719J	Terminal Boot
26	2223J	Cap - Battery
27	2224J	Gasket - Battery
28	600J	Charger Plug Assembly
29	742J	Fuel Tank
30	739J	Fuel Tank Elbow
31	3358P	Screw, Truss Hd. Phillips 1/4 - 20 x 5/8
32	677A201	Belt Keeper Assembly
33	2198J	Engine Pulley
34	5608P	Screw, Hex Hd. Thd. Rolling 3/8 - 16 x 1 - 1/2
35	1634P	Washer 3/8 x 1 - 1/4 x 7 Ga.
36	6070P	Screw, Hex Hd. w/Sems Lockwasher 3/8 - 24 x 1 - 3/8 Nylon Patch Gr. 5
37	65053	Key, Woodruff No. 6
38	191705	Engine, 8 H.P. Briggs & Stratton Type No. 5847-01
39	6347R	Fuse - 30 Amp.
40	2093J	Safety Switch
41	7754R	Solenoid
42	8027R	Wire, Solenoid Ground
43	669J	Cable Assembly (Battery to Solenoid)
44	2098J	Cable Assembly (Battery to Ground)
45	589P	Nut, Hex 5/16 - 24 UNF
46	1007P	Lockwasher 5/16
47	543P	Nut, Hex No. 10 - 32
48	1006P	Lockwasher No. 10
49	3003P	Bolt, Hex 1/4 - 20 x 3/4
50	67758	Lockwasher, Internal Tooth 5/8
51	67759	Nut 5/8 - 32 UNF
52	2316J	Fuel Line

REPAIR PARTS

32" REAR ENGINE RIDING LAWN MOWER--MODEL NUMBER K8327CR
TRANSMISSION MODEL NUMBER 719A

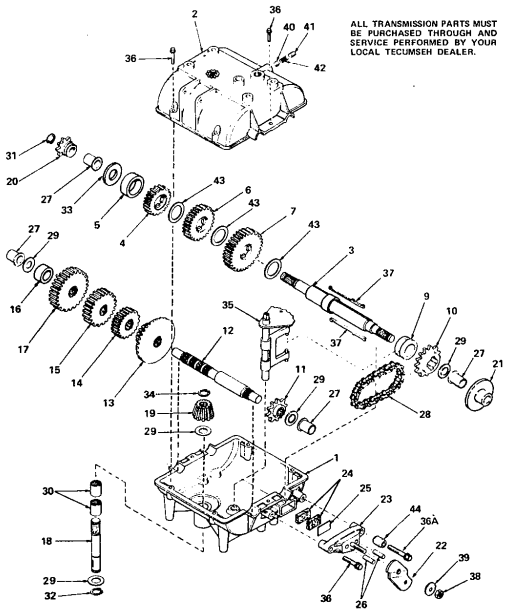

ALL TRANSMISSION PARTS MUST BE PURCHASED THROUGH AND SERVICE PERFORMED BY YOUR LOCAL TECUMSEH DEALER.

REPAIR PARTS

32" REAR ENGINE RIDING LAWN MOWER--MODEL NUMBER K8327CR
TRANSMISSION MODEL NUMBER 719A

KEY NO.	PART NO.	DESCRIPTION
	794212A	Complete Transmission (719A)
1	770061	Case, Transmission
2	772070	Cover, Transmission
3	776162	Shaft, Output and Brake
4	778121	Gear, Spur (20 teeth)
5	786072	Spacer
6	778123	Gear, Spur (25 teeth)
7	778124	Gear, Spur (30 teeth)
9	784266	Collar, Shift
10	786083	Sprocket (18 teeth)
11	786082	Sprocket (9 teeth)
12	776134	Shaft, Counter
13	778109	Gear, Bevel (42 tooth and 15 tooth spur gear)
14	778126	Gear, Spur (20 teeth)
15	778127	Gear, Spur (25 teeth)
16	786071	Spacer
17	778129	Gear, Spur (30 teeth)
18	776135	Shaft, Input
19	778113	Bevel pinion, Input
20	786047	Sprocket (8 teeth)
21	790003	Disk, Brake
22	790004	Lever, Brake
23	790005	Holder, Brake pad
24	790006	Pad, Brake
25	790007	Plate, Brake pad
26	786026	Pin, Dowel
27	780105	Bushing, Flanged
28	786081	Chain, Roller (No. 41 chain, 24 links)
29	780072	Race, Thrust
30	780106	Bearing, Needle
31	792072	Ring, Retaining
32	792035	Ring, Retaining
33	780109	Washer
34	788040	Ring, Retaining
35	784270	Rod & Fork Assy., Shift
36	792073	Screw, Hex hd. taptite, 1/4 - 20 x 1 - 1/4
36A	792085	Screw, Hex hd. taptite, 1/4 - 20 x 2 - 1/4
37	792089A	Key
38	792075	Nut, 5/16 - 24 lock
39	792076	Washer, Flat, 5/16
40	792077	Ball, Steel, 5/16"
41	792078	Screw, Set, 3/8 - 16 x 3/8
42	792079	Spring
43	780108	Washer, Thrust
44	786067	Spacer

REPAIR PARTS

32" REAR ENGINE RIDING LAWN MOWER--MODEL NUMBER K8327CR
BRIGGS & STRATTON 8 H.P. ENGINE--MODEL NO. 191705, TYPE NO. 5647-01

CYLINDER, CRANKSHAFT AND ENGINE BASE GROUP

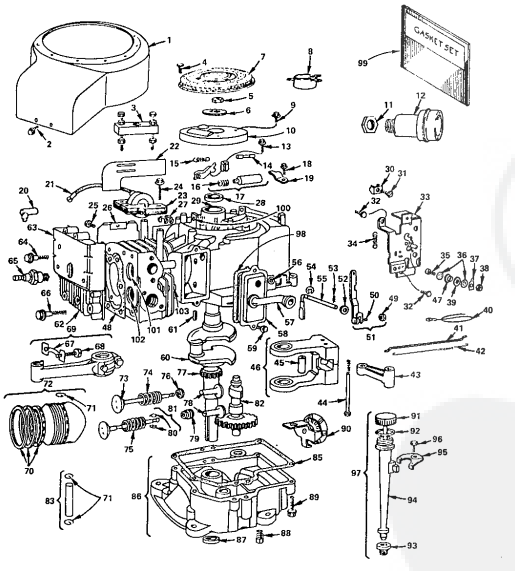

ALL ENGINE PARTS MUST BE PURCHASED THROUGH AND SERVICE PERFORMED BY YOUR LOCAL BRIGGS AND STRATTON DEALER.

REPAIR PARTS

32" REAR ENGINE RIDING LAWN MOWER--MODEL NUMBER K8327CR
BRIGGS & STRATTON 8 H.P. ENGINE--MODEL NO. 191705, TYPE NO. 5647-01

CYLINDER, CRANKSHAFT AND ENGINE BASE GROUP

KEY NO.	PART NO.	DESCRIPTION
1	391379	Housing - Blower
2	93158	Screw - Sem
3	19165	Puller - Flywheel
4	93805	Screw - Sem
5	92284	Nut - Flywheel
6	220865	Washer - Spring
7	222562	Screen - Flush Rotating
8	222561	Cup - Screen Mtg.
9	93705	Screw - Sem
10	222117	Cover - Breaker Point
11	91242	Locknut - Muffler
12	393910	Muffler - Exhaust
13	93381	Screw - Breaker Arm
14	65704	Plunger - Breaker Point
15	26018	Spring - Breaker Arm
16	260374	Spring - Connector
17	294628	Breaker Points & Condenser (Inc. Key No's. 15 & 16)
18	93042	Screw - Sem
19	220477	Clamp - Condenser
20	66538	Elbow - Spark Plug
21	221798	Terminal - Ignition Cable
22	221760	Guide - Air
23	298968	Armature Ass'y.
24	93381	Screw - Armature
25	93163	Screw - Sem
26	222830	Shield - Cylinder
27	221907	Clip - Wire
28	294606	Oil Seal
29	393675	Cylinder Assembly
30	221535	Clamp - Casing
31	93496	Screw - Sem
32	93572	Screw
33	390662	Plate - Governor Control
34	261306	Spring - Governor
35	91920	Screw - Terminal
36	92791	Lockwasher
37	93722	Terminal - Spade
38	90576	Hex Nut No. 8 - 32
39	66068	Washer - Insulating
40	299500	Wire - Ground
41	260971	Link - Governor
42	260984	Spring - Governor Link
43	212359	Link - Counterweight
44	93874	Screw - Counterweight
45	298909	Pin - Counterweight
46	390172	Counterweight Ass'y.
47	66554	Collar - Insulating
48	270430	*Gasket - Cylinder Head
49	231082	Hex Nut No. 10 - 24
50	92613	Bolt - Governor Lever
51	391733	Lever Ass'y. - Governor (Inc. Key No's. 49 & 50)
52	222450	Washer - Governor Lever
53	93306	Cotter - Hair Pin
54	93307	Retainer - E-Ring
55	231058	Crank - Governor
56	231055	Bushing - Governor Crank
57	280005	Breather Tube
58	391406	Breather Ass'y.
59	93536	Sems Screw
60	391757	Crankshaft
61	61760	Key - Flywheel
62	212286	Cylinder Head
63	222636	Cover - Cylinder Head
64	93211	Screw - 2 - 21/32"
65	293918	Spark Plug Resistor
66	93723	Screw - 3"
67	222114	Lock - Connecting Rod Screw
68	92659	Screw - Connecting Rod
69	390402	Rod Ass'y. - Connecting (Inc. Key No's. 67 & 68)
70	391669	RING SET - PISTON - Std.
	391670	.010 Oversize
	391671	.020 Oversize
	391672	.030 Oversize
71	68546	Lock - Piston Pin
72	391673	Piston Ass'y. (Inc. Key No's. 70 & 71)
	391674	.010 Oversize
	391675	.020 Oversize
	391676	.030 Oversize
73	261055	Intake Valve
74	65906	Spring - Intake Valve
75	26828	Spring - Exhaust Valve
76	221596	Retainer - Intake Valve
77	261105	Gear - Timing
78	260933	Tappet - Valve
79	292260	Rotocoil - Exhaust Valve
80	93630	Retainer - Exhaust Valve
81	390419	Exhaust Valve (Inc. Key No. 80)
82	211689	Gear - Cam
83	295840	Pin Ass'y. - Piston (Inc. (2) each Key No. 71)
	295841	Pin Ass'y. - Piston .005 Oversize
85	27750	*Gasket - Crankcase Cover - 1/64" thick
	27876	Gasket - Crankcase Cover - .005" thick
	27877	Gasket - Crankcase Cover - .009" thick
86	298616	Oil Sump (Inc. Key No's. 85 and 87)
87	298423	Oil Seal
88	91084	Plug - Oil Drain
89	93585	Screw - Sem
90	392718	Oil Slinger - Governor
91	391840	Cap & Dipstick - Oil Filler
92	270920	Seal - Filler Cap
93	68838	Seal - Filler Tube
94	280133	Tube - Oil Filler
95	222502	Clamp - Oil Filler Tube
96	93804	Screw - Clamp Mtg.
97	392066	Filler Group - Oil (Inc. Key No's. 91, 92, 93, 94, 95 & 96)
98	27803	*Gasket - Valve Cover
99	299577	Gasket Set
100	23513	Bushing - Plunger
101	211661	Seat - Intake Valve (Std.)
102	211661	Seat - Exhaust Valve (Std.)
103	230865	Guide - Exhaust Valve

*INCLUDED IN GASKET SET 299577

SPARK ARRESTER ASSEMBLY (OPTIONAL)

	391913	Spark Arrester
	222537	Deflector
	93705	Screw (4 required)

REPAIR PARTS

32" REAR ENGINE RIDING LAWN MOWER–MODEL NUMBER K8327CR
BRIGGS & STRATTON 8 H.P. ENGINE–MODEL NO. 191705, TYPE NO. 5647-01

CARBURETOR NUMBER 390811

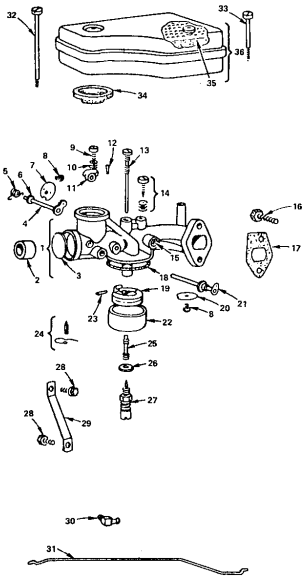

ALL ENGINE PARTS MUST BE PURCHASED THROUGH AND SERVICE PERFORMED BY YOUR LOCAL BRIGGS AND STRATTON DEALER.

REPAIR PARTS

32" REAR ENGINE RIDING LAWN MOWER–MODEL NUMBER K8327CR
BRIGGS & STRATTON 8 H.P. ENGINE–MODEL NO. 191705, TYPE NO. 5647-01

CARBURETOR NUMBER 390811

KEY NO.	PART NO.	DESCRIPTION
1	299851	Body Ass'y. (Includes Key No. 3)
2	211682	Venturi - Carburetor
3	221997	*Plug - Welch
4	390884	Shaft and Lever - Choke
5	261116	Spring - Choke Return
6	270382	Washer - Choke Shaft
7	222010	Valve - Choke
8	93499	Screw - Sem
9	91929	Screw - Fil. Hd. Mach. No. 8 - 32 x 5/8
10	26157	Spring - Throttle Adjustment
11	211712	Stop - Throttle
12	93043	Pin - Throttle Stop
13	299240	*Nozzle - Carburetor
14	292681	*Valve Ass'y., Carb. Idle
15	23108	Bushing - Throttle Shaft
16	93357	Screw - Carburetor Mtg.
17	270824	*Gasket - Carburetor Mtg.
18	270511	*Gasket - Float Bowl
19	299707	Float - Carburetor
20	221986	Valve - Throttle
21	391512	Shaft & Lever - Throttle
22	221995	Bowl - Float
23	230896	*Pin - Float Hinge
24	299096	*Valve - Fuel Inlet
25	230932	*Screw - Nozzle
26	222014	*Washer - Float Bowl
27	391233	*Valve - Needle
28	93572	Screw
29	222027	Bracket - Carburetor
30	67218	Connector - Fuel Pipe
31	261117	Link - Choke
32	93323	Screw - Air Cleaner
33	93622	Screw - Air Cleaner
34	270539	Gasket - Air Cleaner
35	270528	Element - Air Cleaner
36	391299	Air Cleaner Ass'y. (Inc. Key No 35)
	299852	Carburetor Overhaul Kit (Inc. Parts Marked *)
	390811	Carburetor Assembly

REPAIR PARTS

32" REAR ENGINE RIDING LAWN MOWER–MODEL NUMBER K8327CR
BRIGGS & STRATTON 8 H.P. ENGINE–MODEL NO. 191705, TYPE NO. 5647-01

FLYWHEEL AND STARTER MOTOR GROUP

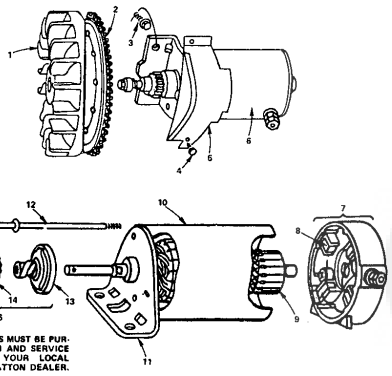

ALL ENGINE PARTS MUST BE PURCHASED THROUGH AND SERVICE PERFORMED BY YOUR LOCAL BRIGGS AND STRATTON DEALER.

KEY NO.	PART NO.	DESCRIPTION
1	392034	Flywheel and Ring Gear Ass'y.
2	392134	Gear - Ring
3	93523	Screw - Sem
4	93410	Screw - Sem
5	390233	Cover & Shield - Starter
6	392749	Motor, Starter (Inc. Key No's. 7 thru 17)
7	390846	End Cap Ass'y. Commutator (Inc. Key No. 8)
8	391705	Brush Ass'y.
9	392747	Armature Ass'y.
10	392744	Housing Ass'y.
11	392061	End Cap Ass'y. Drive
12	391706	Thru Bolt Ass'y.
13	391135	Clutch Ass'y.
14	280104	Gear
15	391462	Retainer & Pin (Inc. Key No. 17)
16	391461	Drive Ass'y. (Inc. Key No's. 13,14 & 15)
17	93754	Roll Pin

REPAIR PARTS

36" RIDING LAWN TRACTOR–MODEL NUMBER L0239AR

CHASSIS

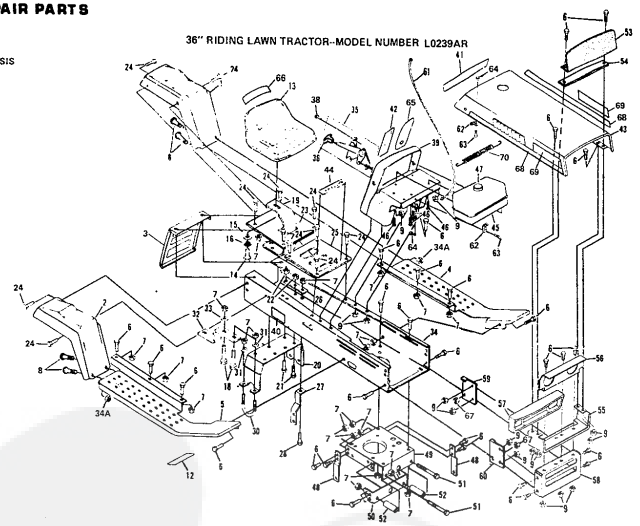

REPAIR PARTS

36" RIDING LAWN TRACTOR–MODEL NUMBER L0239AR

ELECTRIC & ENGINE

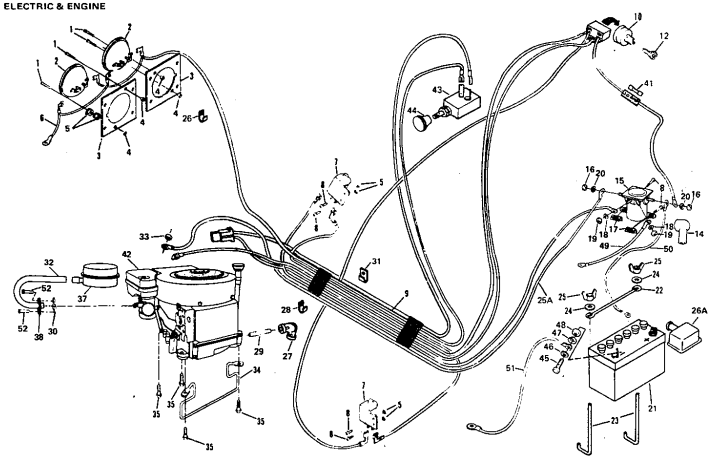

REPAIR PARTS

36" RIDING LAWN TRACTOR–MODEL NUMBER L0239AR

CHASSIS

KEY NO.	PART NO.	DESCRIPTION
1	388J	Fender - L.H.
2	389J	Fender - R.H.
3	1538J	Rear Cover
4	1539J	Foot Rest, L.H.
5	1540J	Foot Rest, R.H.
6	3010P	*Bolt, Hex Head 5/16 - 18 x 3/4
7	575P	Nut, Lock 5/16 - 18 UNC
8	3008P	Bolt, Hex Head 5/16 - 18 x 1/2
9	532P	Nut, Keps 5/16 - 18 UNC
12	376J	Decal - Clutch and Brake
13	1496J	Seat
14	3042P	*Bolt, Hex Head 1/2 - 13 x 1
15	1546P	Washer 17/32 x 1 - 3/16 x 11 Ga.
16	1000P	*Washer, Lock 1/2
18	3012P	*Bolt, Hex Head 5/16 - 18 x 1 - 1/4 Gr. 5
19	73790	Seat Spring
20	73791	Transaxle Support
21	3023P	*Bolt, Hex Head 3/8 - 16 x 1
22	545P	Nut, Lock 3/8 - 16
23	1750J	Cover Plate
24	5612P	Screw, Hex Hd. Thd. Rolling 5/16 - 18 x 1/2
25	677A53	Chassis Cover
26	71507	Support
27	71198	Axle Strap
28	3011P	*Bolt, Hex Head 5/16 - 18 x 1
30	71806	Clamp
31	1809P	Washer, 5/16 x 3/4 x 11 Ga.
32	71205	Tow Hitch
33	1610P	Washer, 3/8 x 1 - 1/4 x 6 Ga.
34	1320J	Chassis
34A	585P	Keps Jam Nut 5/16 - 18 UNC

KEY NO.	PART NO.	DESCRIPTION
35	1544J	Remote Control Ass'y. (Inc. Ref. No. 36)
36	61159	Knob - Remote Control
37	3320P	*Screw, Pan Hd. Machine No. 10 - 24 x 1/2
38	5606P	Screw, Hex Washer Hd. Thd. Cutting 1/4 - 20 x 1/2
39	677A101	Dash Ass'y. (Inc. Key No. 6 and 2 each Key No. 3, Page 21)
40	1217J	Decal, "10"
41	655J	Decal - Dash, Instructions
42	482J	Decal - Dash, Controls
43	7194I	Hood Ass'y.
44	74307	Battery Cap
45	73427	Fuel Tank
46	5547P	Screw, Thd. Cutting 1/4 - 20 x 3/4
47	74145	Fuel Cap
48	71190	Brake Rod Bracket
49	1839J	Engine Base
50	71178	Rocker Bar Support
51	3271P	*Bolt, Hex Head 5/16 - 18 x 2 - 3/4
52	71431	Bushing
53	71913	Hood Insert
54	2064J	Bracket
55	2091J	Panel Frame
56	71915	Headlight Support
57	2090J	Headlight Panel
58	2092J	Lower Grill Frame
59	2066J	Grill Panel - L.H.
60	2065J	Grill Panel - R.H.
61	72011	Hood Cable
62	72012	Lanyard Clevis
63	3003P	*Bolt, Hex 1/4 - 20 x 3/4
64	587P	Locknut, Hex w/Nylon Insert 1/4 - 20
65	481J	Decal - Dash, L.H.
66	245J	Decal - Seat Back
67	580P	Locknut, Hex w/Nylon Insert 5/16 - 18 UNC
68	2217J	Decal - Hood Stripe
69	2127J	Decal - Hood (Roper)
70	72004	Spring

*STANDARD HARDWARE–PURCHASE LOCALLY

REPAIR PARTS

36" RIDING LAWN TRACTOR–MODEL NUMBER L0239AR

ELECTRIC & ENGINE

KEY NO.	PART NO.	DESCRIPTION
1	3226P	Screw, Machine Truss Head No. 10 - 24 x 1
2	6452R	Headlight
3	73025	Headlight Support
4	4632H	Nut, Lock No. 10 - 24
5	561P	Nut, Keps No. 10 - 24 UNC
6	71706	Wire Assembly
7	7755R	Safety Switch
8	3359P	Screw, Machine Phillips Head No. 10 - 24 x 1/2
9	1797J	Wire Harness
10	4406R	Ignition Switch (Inc. Ref No. 12)
12	7552H	Key Set
14	719J	Terminal Cover
15	7754R	Solenoid
16	538P	*Nut, Hex Jam 5/16 - 24 UNF
17	578P	Nut, Speed No. 10 - 24 UNC
18	1006P	*Washer, Lock No. 10
19	543P	*Nut, Hex No. 10 - 32 UNF
20	1003P	*Lockwasher 5/16
21	228J	Battery
22	67187	Battery Rod
23	70456	Battery Bolt
24	1507P	Washer 9/32 x 3/4 x 16 Ga.
25	577P	Wing Nut 1/4 - 20 UNC
25A	1347J	Wire - Solenoid to Starter
26	2521R	Insulated Clip
26A	225J	Terminal Cover
27	4017P	Std. Elbow 90° 3/8 - 18 NPT
28	5320R	Insulated Clip
29	7345B	Nipple, Pipe
30	1407J	Exhaust Gasket
31	6794R	Insulated Clip
32	1389J	Exhaust Tube
33	53490	Nut, Lock 1/4 - 20 UNC
34	1795J	Belt Keeper
35	5608P	Screw, Hex Hd. Thd. Rolling 3/8 - 16 x 1 - 1/2
37	677A86	Muffler
38	1429J	Exhaust Flange
41	6347R	Fuse - 30 Amp.
42	220707	Engine - Briggs and Stratton 10 H.P. Type No. 0134-01
43	7793R	Light Switch
44	7794R	Knob, Light Switch
45	3003P	*Hex Bolt 1/4 - 20 x 3/4
46	1506P	*Washer 9/32 x 5/8 x 16 Ga.
47	1002P	*Lockwasher 1/4 Heavy
48	503P	*Hex Nut 1/4 - 20 UNC
49	8027R	Wire - Ground Solenoid
50	597J	Battery Cable
51	596J	Ground Cable
52	3134P	*Hex Bolt 5/16 - 18 x 3/4 Gr. 5
--	2125J	Fact and Warranty Tag
--	2117J	Owners Manual

*STANDARD HARDWARE–PURCHASE LOCALLY

OPTIONAL EQUIPMENT

Spark Arrestor Muffler LA249AR

REPAIR PARTS

36" RIDING LAWN TRACTOR–MODEL NUMBER L0239AR

STEERING AND WHEELS

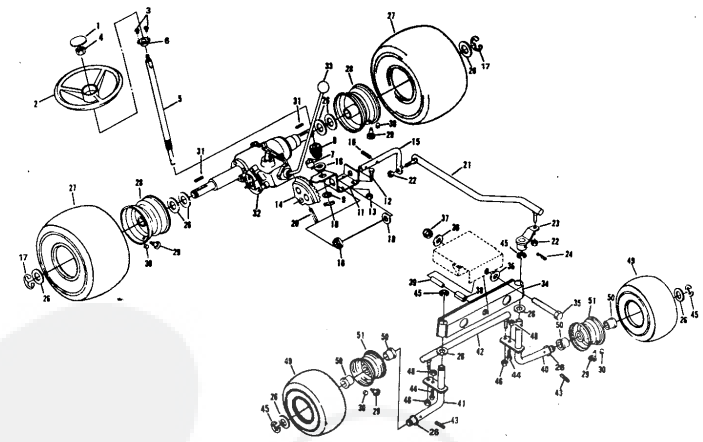

REPAIR PARTS

36" RIDING LAWN TRACTOR–MODEL NUMBER L0239AR

CLUTCH-BRAKE & DRIVE

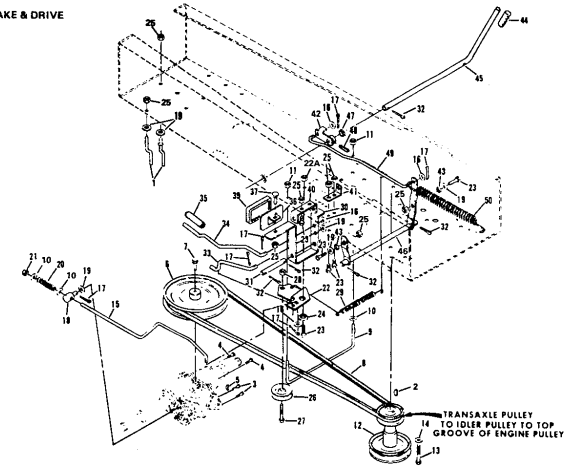

REPAIR PARTS

36" RIDING LAWN TRACTOR–MODEL NUMBER L0239AR

STEERING AND WHEELS

KEY NO.	PART NO.	DESCRIPTION
1	1114J	Steering Wheel Insert
2	506J	Steering Wheel
3	5614P	Hex Washer Hd. Sht. Metal Screw No. 10 x 1/2 Type AB
4	588P	*Nut, Hex Jam 1/2 - 20UNF
5	1595J	Steering Shaft
6	1554J	Bushing
7	74580	Shaft Spacer
8	74581	Pinion Gear
9	1635P	Washer, 5/8 x 1- 1/2 x 11 Ga.
10	52379	Spring Pin 3/16 x 1
11	74577	Steering Bracket
12	3010P	*Bolt, Hex Head 5/16 - 18 x 3/4
13	576P	Nut, Lock 5/16 - 18 UNC
14	71172	Gear
15	1528J	Steering Rod
16	71208	Bushing
17	5000P	E-Ring
18	1618P	Washer, 21/32 x 1 - 1/4 x 13 Ga. (0 - 2 as Req'd.)
20	73446	Drive - Lock Pin
21	71219	Drag Link
22	7810H	Locknut, Hex 3/8 - 24 UNF
23	71185	Steering Arm Assembly
24	62079	Spring Pin 1/4 x 1 - 1/4
26	1552P	Washer 25/32 x 1 - 1/4 x 16 Ga.
27	71653	Tire (18.00 - 9.50 x 8)
28	71652	Rim
29	65139	Valve Stem
30	59192	Valve Cap
31	66414	Square Key 3/16 x 2
32	784191A	Transaxle Assembly Model 143.658A (See Pages 24 and 25)
33	55862	Knob - Transmission
34	677A81	Rocker Bar Assembly
35	3385P	Bolt, Hex Head 1/2 - 13 x 3
36	1613P	Washer, 17/32 x 7/8 x 16 Ga.
37	581P	Nut, Lock 1/2 - 13 UNC
38	67151	Bushing
39	71188	Pivot Spacer
40	677A169	Spindle Assembly - L.H.
41	677A168	Spindle Assembly - R.H.
42	73240	Tie Rod
43	9530R	Groove Pin
44	3021P	*Bolt, Hex Head 3/8 - 16 x 3/4
45	5022P	Klip Ring
46	582P	Nut, Lock 5/16 - 24 UNF
48	579P	Nut, Lock 3/8 - 16 UNC
49	71651	Tire (15 x 6.00 x 6)
50	625J	Bearing
51	677A98	Rim Ass'y. (Inc. Ref. No. 50)

* STANDARD HARDWARE–PURCHASE LOCALLY

REPAIR PARTS

36" RIDING LAWN TRACTOR–MODEL NUMBER L0239AR

CLUTCH-BRAKE & DRIVE

KEY NO.	PART NO.	DESCRIPTION
1	71200	Belt Guide
2	65053	Key, Woodruff No. 6
3	6059P	Screw, Hex Head w/Washer 5/16 - 18 x 7/8
4	6060P	Screw, Hex Head w/Washer 5/16 - 18 x 1 - 1/8
5	52859	Key, Woodruff No. 61
6	73542	Pulley - Transaxle
7	6058P	Screw, Machine w/Washer 1/4 - 20 x 3/4 Gr. 5
8	73794	V-Belt
9	71241	Mid Belt Guide
10	1611P	Washer, 13/32 x 7/8 x 16 Ga.
11	545P	Locknut 3/8 - 16
12	71923	Pulley – Engine
13	6068P	Screw, Machine w/Ext. Lockwasher 3/8 - 24 x 1 - 3/4 - Nylon Patch
14	1610P	Washer, 3/8 x 1 - 1/4 x 6 Ga.
15	73792	Brake Rod
16	1507P	Washer, 13/32 x 3/4 x 16 Ga.
17	2603P	*Cotter Pin 3/32 x 3/4
18	71238	Trunion
19	1599P	Washer, 11/32 x 3/4 x 16 Ga.
20	71239	Brake Spring
21	591P	Locknut w/Washer 3/8 - 16 UNC
22	71201	Idler Bracket
22A	590P	Locknut w/Washer 5/16 - 18 UNC
23	3010P	*Bolt, Hex Head 5/16 - 18 x 3 4
24	71202	Bushing
25	576P	Nut, Lock 5/16 - 18 UNC
26	67400	Pulley - Idler
27	3027P	*Bolt, Hex Head 3 8 - 16 x 1 - 1 2
28	579P	Nut, Lock 3/8 - 16 UNC
29	2044J	Spring - Idler
30	390J	Foot Pedal
31	71223	Pedal Shaft
32	2506P	*Cotter Pin 1/8 x 1
33	74419	Clutch Rod
34	372J	Park Brake Rod
35	71226	Grip
36	71222	Pedal Plate
37	16P	*Bolt, Carriage 5/16 - 18 x 3.4
39	67365	Foot Pad
40	71199	Pedal Bracket
41	71204	Switch Bracket
42	73229	Clutch Arm Assembly
43	71195	Spacer
44	71246	Grip
45	71242	Clutch Handle
46	71191	Clutch Arm Assembly
47	1545P	Washer, 17/32 x 1 x 16 Ga.
48	52379	Spring Pin 3/16 x 1
49	74474	Blade Clutch Rod
50	71248	Spring

*STANDARD HARDWARE–PURCHASE LOCALLY

REPAIR PARTS

36" RIDING LAWN TRACTOR--MODEL NUMBER L0239AR
TRANSAXLE--MODEL NUMBER 143.658A

ALL TRANSAXLE PARTS MUST BE PURCHASED THROUGH AND SERVICE PERFORMED BY YOUR LOCAL TECUMSEH DEALER.

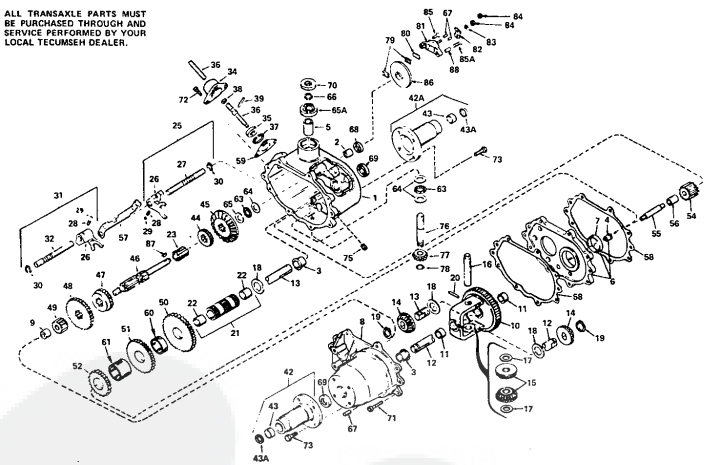

REPAIR PARTS

36" RIDING LAWN TRACTOR--MODEL NUMBER L0239AR

MOWER

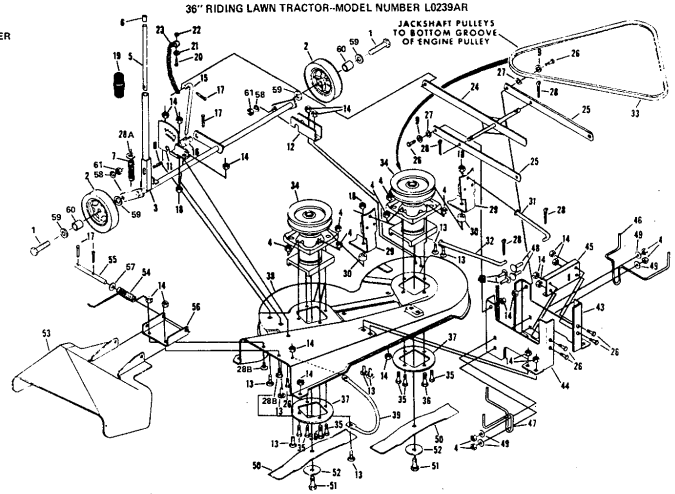

REPAIR PARTS

36" RIDING LAWN TRACTOR--MODEL NUMBER L0239AR
TRANSAXLE--MODEL NUMBER 143.658A

KEY NO.	PART NO.	DESCRIPTION
	794191A	Complete Transaxle
1	770063	Case Ass'y., Transaxle (Inc. No's. 2, 3 & 5)
2	780086	Bearing, Needle
3	780059	Bearing, Bronze
4	780060	Bearing, Bronze
5	780061	Bearing, Bronze
6	786033	Plate Ass'y., Center (Inc. No's. 4 & 7)
7	780062	Bearing, Bronze
8	772042	Cover Ass'y., Transaxle (Inc. No's. 3 & 9)
9	780063	Bearing, Needle
10	778053	Gear Ass'y., Differential (Inc. No. 11)
11	780064	Bearing, Bronze
12	774220	Axle, Left Hand
13	774220	Axle, Right Hand
14	778067	Gear, Bevel
15	778068	Pinion, Bevel
16	786034	Pin, Drive
17	780065	Washer, Thrust
18	780001	Washer, Thrust
19	788038	Ring, Snap
20	792040	Pin, Roll
21	786080	Sleeve Ass'y., Countershaft (Inc. 2 of No. 22)
22	780066	Bearing, Bronze
23	776090	Shaft, Idler
25	784079	Rod Ass'y., Shift (1st & Rev.) (Inc. No's. 26 thru 30)
26	784094	Fork, Shift
27	784083	Rod, Shift
28	792003	Spring
29	792004	Ball, Steel
30	792017	Ring, Snap
31	784084	Rod Ass'y., Shift (2nd & 3rd) (Inc. No's. 26, 28, 29, 30 & 32)
32	784085	Rod, Shift
34	784088	Housing, Shift Lever
35	784094	Keeper, Shift Lever
36	784284	Lever, Shift
37	792016	Ring, Snap
38	792001	Ring, Quad
39	792049	Pin, Drive
42	782036A	Housing Ass'y., Axle (Inc. No's. 43 & 43A)
42A	782043	Housing Ass'y., Axle (Inc. No's. 43 & 43A)
43	530105	Bearing, Needle
43A	788042	Seal, Oil
44	778024	Gear (16 Teeth)
45	778057	Gear, Bevel (33 Teeth)
46	776138	Shaft, Shifter & Brake
47	778058	Gear, Shifting (2nd & 3rd)
48	778059	Gear, Shifting (1st & Rev.)
49	778060	Gear, Spur (12 Teeth)
50	778140	Gear, Countershaft Drive (39 Teeth)
51	778141	Gear, Countershaft (34 Teeth)
52	778142	Gear, Countershaft (25 Teeth)
54	778064	Gear, Reverse Idler
55	776057	Shaft, Reverse Idler
56	786036	Spacer, Reverse Idler
57	784087	Stop, Shifter
58	788033	Gasket, Case & Cover
59	788003	Gasket, Shift Lever Housing
60	786079	Spacer
61	786078	Spacer
63	780071	Bearing, Thrust
64	780072	Washer, Thrust
65	780073	Washer, Thrust
65A	780093	Bearing, Ball
66	792035	Ring, Snap
67	786026	Pin, Dowel
68	788043	Seal, Oil
69	788009	Seal, Oil
70	788035	Seal, Oil
71	792036	Screw, Flanged Hex Hd. 1/4 - 20 x 1 - 1/4
72	792007	Screw, Socket Hd. Cap, 1/4 - 20 x 3/4
73	792037	Screw, Hex Hd., Sems 5/16 - 18 x 1
75	792039	Plug, Pipe 1/8"
76	776103	Shaft, Input
77	778077	Pinion, Input
78	788040	Ring, Retaining
79	790006	Pad, Brake
80	790007	Plate, Brake Pad
81	790005	Holder, Brake Pad
82	790004	Lever, Brake
83	792076	Washer, Flat
84	792075	Nut, Lock
85	792073	Screw, Hex Hd. Cap, 1/4 - 20 x 1 - 1/4 Thrd. Forming
85A	792085	Screw, Hex Hd. Cap 1/4 - 20 x 2 - 1/4 Thrd. Forming
86	790009	Disk, Brake
87	792045	Key, Woodruff No. 61
88	786066	Spacer

REPAIR PARTS

36" RIDING LAWN TRACTOR--MODEL NUMBER L0239AR

MOWER

KEY NO.	PART NO.	DESCRIPTION
1	3199P	Hex Bolt 3/8 - 24 x 2 - 3/4 Gr. 5
2	9536H	Gauge Wheel
3	677A134	Pivot Rod Assembly
4	545P	Nut, Lock 3/8 - 16 UNC
5	1663J	Rod - Plunger
6	9479R	Cap - Lever Plunger
7	7169	Spring
8	8540R	Pin - Drive Lork
9	1599P	Washer, 11/32 x 3/4 x 16 Ga.
11	7293	Quadrant Assembly
12	67337	Pivot Rod Support
13	67P	*Bolt, Carriage 5/16 - 18 x 3/4 Gr. 5
14	575P	Nut, Lock 5/16 - 18 UNC
15	71300	Adjustment Rod
16	71301	Trunion
17	2509P	*Cotter Pin 3/32 x 3/4
18	591P	Locknut w/Washer, 3/8 - 16 UNC
19	1747J	Grip, Handle
20	3224P	*Screw, Pan Hd. Machine 1/4 - 20 x 1
21	1575P	Washer, 9/32 x 1 x 16 Ga.
22	574P	Nut, Hex Lock 1/4 - 20 UNC
23	7401A	Sway Chain
24	72915	Parallel Rod Assembly
25	71297	Parallel Link
26	3010P	*Bolt, Hex Head 5/16 - 18 x 3/4
27	71616	Spacer
28	2506P	*Cotter Pin 1/8 x 1
28A	1615P	Washer, 15/32 x 3/4 x 16 Ga.
28B	5P	*Bolt, Carriage Sh. Shoulder 5/16 - 18 x 3/4
29	677A46	Brake Assembly
30	71522	Spacer, Brake Spring
31	71525	Brake Rod - L.H.
32	71524	Brake Rod - R.H.
33	62828	Belt
34	677A181	Jackshaft Assembly
35	3023P	*Bolt, Hex Head 3 8 - 16 x 1
36	3329P	*Bolt, Hex Head 3 8 - 16 x 1 1 2
37	71575	Plate
38	677A51	Housing w Silk Screening
39	71647	Housing Skid
43	71276	Housing Bracket - L.H.
44	71277	Housing Bracket - R.H.
45	71278	Channel
46	71298	Belt Keeper - L.H.
47	71299	Belt Keeper - R.H.
48	20P	*Bolt, Carriage 3/8 - 16 x 1
49	1614P	Washer, 13/32 x 7/8 x 13 Ga.
50	71285	Blade
51	6065P	Screw, Hex Head w/Washer - Nylon Patch 3/8 - 24 x 7/8 Gr. 5
52	67354	Washer, 25/64 x 2 - 3/8 x 5/32
53	677A52	Deflector (Discharge Guard)
54	71526	Deflector Spring
55	71585	Hinge Rod
56	71528	Bracket-Deflector
57	1623P	Washer 11 32 x 7 8 x 16 Ga.
58	1004P	Lockwasher 3 8
59	1513P	Washer 13 32 x 13 16 x 16 Ga.
60	7375H	Bushing
61	515P	Hex Nut 3 8 24 UNF

*STANDARD HARDWARE -PURCHASE LOCALLY

REPAIR PARTS

36" RIDING LAWN TRACTOR--MODEL NUMBER L0239AR
BRIGGS & STRATTON 10 H.P. ENGINE--MODEL NO. 220707, TYPE NO. 0134-01

CYLINDER, CRANKSHAFT AND ENGINE BASE GROUP

ALL ENGINE PARTS MUST BE PURCHASED THROUGH AND SERVICE PERFORMED BY YOUR LOCAL BRIGGS AND STRATTON DEALER.

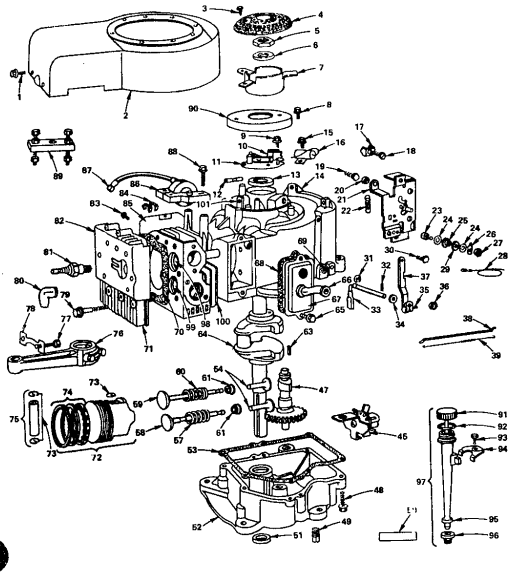

KEY NO.	PART NO.	DESCRIPTION
1	93158	Screw - Blower Housing Mounting Sem
2	391556	Housing - Blower
3	93808	Screw - Sem
4	222562	Screen - Flush Rotating
5	92284	Nut - Hex
6	220865	Washer - Spring
7	222561	Cup - Screen Mounting
8	93614	Screw - Sem
9	93226	Screw - Breaker Adjusting Sem
10	26018	Spring - Breaker Arm
11	391284	Breaker Ass'y. - Ignition (Inc. No. 10)
12	65704	Plunger - Breaker Point
13	391086	Seal - Oil
14	393863	Cylinder Ass'y. (Inc. No. 13)
15	93042	Screw - Sem
16	391792	Condenser
17	221535	Clamp - Casing
18	93498	Screw - Sem
19	93686	Screw - Control Bracket Mounting
20	231039	Spacer - Control Bracket Mounting
21	390662	Plate - Gov. Control
22	261306	Spring - Governor
23	91920	Screw - Terminal
24	92791	Washer - Lock - Shakeproof
25	66564	Collar - Insulating
26	93722	Terminal - Spade
27	90576	Nut - Hex 8 - 32
28	391602	Wire - Ground
29	66668	Washer - Insulating
30	93572	Screw
31	93307	Retainer - E-Ring
32	93306	Cotter - Hair Pin
33	231058	Crank - Governor (1/4" Dia.)
34	222452	Washer - Gov. Crank (1/4" I.D.)
35	92613	Bolt - Governor Lever
36	231092	Nut - Hex, 10 - 24
37	391733	Lever Ass'y. - Governor (for 1/4" Dia. Crank) (Inc. No's. 35 & 36)
38	261198	Link - Governor
39	261197	Spring - Governor Link
45	391764	Oil Slinger, Gov. Gear & Bracket Ass'y.
47	212796	Gear - Cam
48	93585	Screw - Sump Mounting Sem
49	91084	Plug - Oil Drain
50	393411	Gasket Set
51	291675	Seal - Oil
52	391784	Sump - Oil (Inc. No's. 51 & 53)
53	270808	*Gasket - Crankcase Cover - 1/64" Thick
	270916	*Gasket - Crankcase Cover - .005" Thick
	270916	*Gasket - Crankcase Cover - .009" Thick
54	261183	Tappet - Valve
57	26828	Spring - Exhaust Valve
58	261503	Valve - Exhaust
59	261462	Valve - Intake
60	65906	Spring - Intake Valve
61	271596	Retainer - Intake Valve
63	61760	Key - Flywheel
64	261505	Crankshaft
65	93394	Screw - Sem
66	280100	Tube - Breather
67	391406	Breather Assembly
68	27803	*Gasket - Valve Cover
69	231055	Bushing - Gov. Crank (1/4" I.D.)
70	271075	*Gasket - Cylinder Head
71	212366	Head - Cylinder
72	391285	Piston Ass'y. - Standard (Inc. No's. 73 & 74)
	391287	Piston Ass'y. - .010" O.S.
	391288	Piston Ass'y. - .020" O.S.
	391289	Piston Ass'y. - .030" O.S.
73	260924	Lock - Piston Pin
74	391780	Ring Set - Piston - Std.
	391781	Ring Set - Piston - .010" O.S.
	391782	Ring Set - Piston - .020" O.S.
	391783	Ring Set - Piston - .030" O.S.
75	299691	Pin Ass'y. - Piston - Std. (Inc. No. 73)
	391286	Pin Ass'y. - Piston - .005" O.S.
76	393860	Rod Ass'y. - Connecting (Inc. 77 & 78)
77	92909	Screw - Conn. Rod
78	272299	Lock - Conn. Rod Screw
79	93723	Screw - Cylinder Head (3" Long) NOTE: 93781 Stud - Cylinder Head 22963 Washer
80	66538	Elbow - Spark Plug
81	293918	Plug - Spark (1 - 1/2" High - 37 - 42 MM) NOTE: Spark Plugs use Ignition Cable Terminal No. 221786.
82	222725	Cover - Cylinder Head
83	93163	Screw - Cylinder Shield Mtg. Sem
84	221907	Clip - Wire
85	222744	Shield - Cylinder
86	298968	Armature Ass'y.
87	221798	Terminal - Ignition Cable
88	93381	Screw - Armature Mounting Sem
89	19203	Puller - Flywheel
90	222309	Cover - Breaker Point
91	391841	Cap and Dipstick - Oil Filler
92	270920	Seal - Filler Cap
93	93804	Screw - Clamp Mtg.
94	222502	Clamp - Oil Filler Tube
95	280134	Tube - Oil Filler
96	68838	Seal - Filler Tube
97	392067	Filler Group - Oil
98	261463	Intake Valve Seat
99	211861	Exhaust Valve Seat
100	230881	Exhaust Valve Stem Guide
101	23513	Plunger Bushing

*STANDARD HARDWARE--PURCHASE LOCALLY

REPAIR PARTS

36" RIDING LAWN TRACTOR--MODEL NUMBER L0239AR
BRIGGS & STRATTON 10 H.P. ENGINE--MODEL NO. 220707, TYPE NO. 0134-01

AIR CLEANER AND CARBURETOR

ALL ENGINE PARTS MUST BE PURCHASED THROUGH AND SERVICE PERFORMED BY YOUR LOCAL BRIGGS AND STRATTON DEALER.

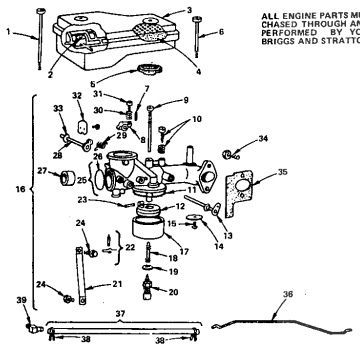

KEY NO.	PART NO.	DESCRIPTION
1	93323	Screw - Air Cleaner
2	280118	Support - Air Cleaner Element
3	391786	Cleaner Ass'y. - Air (Inc. No's. 2 & 4)
4	270843	Element - Air Cleaner
5	270853	Gasket - Air Cleaner
6	93622	Screw - Air Cleaner
7	93043	Pin - Throttle Stop
8	211712	Stop - Throttle
9	299740	Nozzle - Carburetor
10	292881	+Valve Ass'y. - Carburetor Idle
11	*270511	+Gasket - Float Bowl
12	299707	Float - Carburetor
13	391512	Shaft & Lever - Throttle
14	222858	Valve - Throttle
15	93499	Screw - Throttle & Choke Valve Mtg. Sem
16	393410	Carburetor Ass'y. (Choke-A-Matic) (Inc. No's. 7 thru 33)
17	221995	Bowl - Float
18	230932	+Screw - Nozzle
19	222014	+Washer - Float Bowl
20	391233	+Valve - Needle
21	222311	Bracket - Carburetor
22	299098	+Valve - Fuel Inlet
23	230896	+Pin - Float Hinge
24	93572	Screw
25	391787	Body Ass'y. - Carburetor (Inc. No. 26)
26	221997	+Plug - Welch
27	211992	Venturi - Carburetor
28	390684	Shaft & Lever - Choke
29	261116	Spring - Choke Return
30	26157	Spring - Throttle Adjustment
31	91920	Screw - Machine, Fill. Hd. 8 - 32 x 5/8"
32	222010	Valve Choke
33	270382	Washer - Choke Shaft
34	93357	Screw - Carburetor Mtg.
35	270872	*Gasket - Carburetor Mtg.
36	261274	Link - Choke
37	296004	Pipe - Fuel (Inc. No. 38)
38	93053	Clamp - Fuel Pipe
39	67218	Connector - Fuel Pipe

+INCLUDED IN CARBURETOR OVERHAUL KIT - PART NO. 299852

*INCLUDED IN GASKET SET - PART NO. 393411

REPAIR PARTS

36" RIDING LAWN TRACTOR--MODEL NUMBER L0239AR
BRIGGS & STRATTON 10 H.P. ENGINE--MODEL NO. 220707, TYPE NO. 0134-01

ALTERNATOR AND STARTER MOTOR GROUP

ALL ENGINE PARTS MUST BE PURCHASED THROUGH AND SERVICE PERFORMED BY YOUR LOCAL BRIGGS AND STRATTON DEALER.

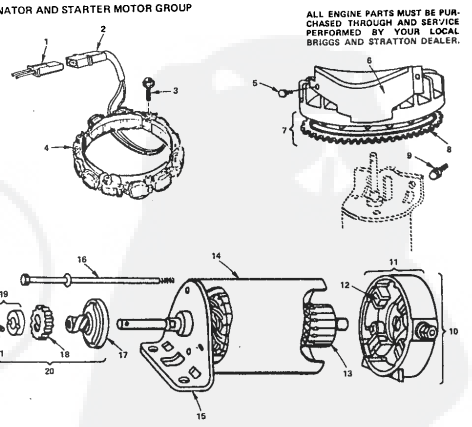

KEY NO.	PART NO.	DESCRIPTION
1	393362	Alt. Harness Assembly
2	393456	Diode and Conn. Assembly
3	93621	Screw - Sem
4	393474	Stator - Alternator
5	93410	Screw - Sem
6	390233	Cover and Shield - Starter
7	391988	Flywheel & Ring Gear Ass'y. - Magneto (Inc. No. 14)
8	392134	Gear - Ring (Inc. Mounting Parts)
9	93523	Screw - Sem
10	392749	Motor and Drive Ass'y. (12 Volt) (Inc. No's. 11 thru 20)
11	390846	End Cap Ass'y. Commutator (Inc. No. 12).
12	391705	Brush Ass'y.
13	392747	Armature Ass'y.
14	392744	Housing Ass'y.
15	392061	End Cap Ass'y. Drive
16	391706	Thru Bolt Ass'y.
17	391135	Clutch Ass'y.
18	280104	Gear
19	391462	Retainer & Pin
20	391461	Drive Ass'y. (Inc. No's. 17, 18 & 19)
21	93754	Roll Pin

36" RIDING LAWN TRACTOR-MODEL NUMBER L0239AR

SCHEMATIC DIAGRAM

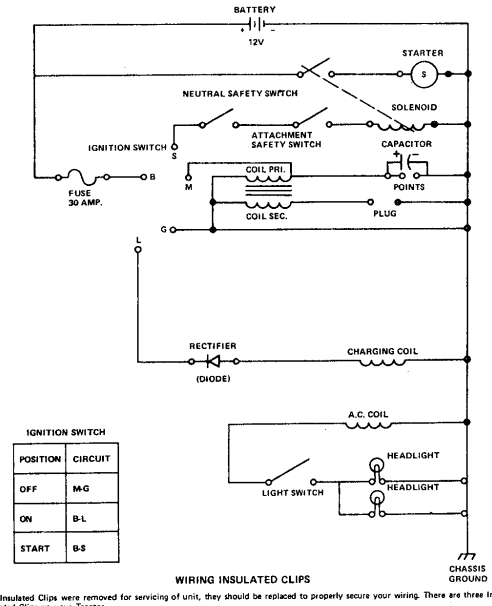

IGNITION SWITCH

POSITION	CIRCUIT
OFF	M-G
ON	B-L
START	B-S

WIRING INSULATED CLIPS

If Insulated Clips were removed for servicing of unit, they should be replaced to properly secure your wiring. There are three Insulated Clips on your Tractor.

1. L.H. side of Tractor for safety switch wires (Key No. 28, page 14).
2. R.H. side of Tractor securing wire harness and cable wire (Key No. 31, page 14).
3. Headlight wire (Key No. 26, page 14).

36" RIDING LAWN TRACTOR-MODEL NUMBER L1219AR

SCHEMATIC DIAGRAM

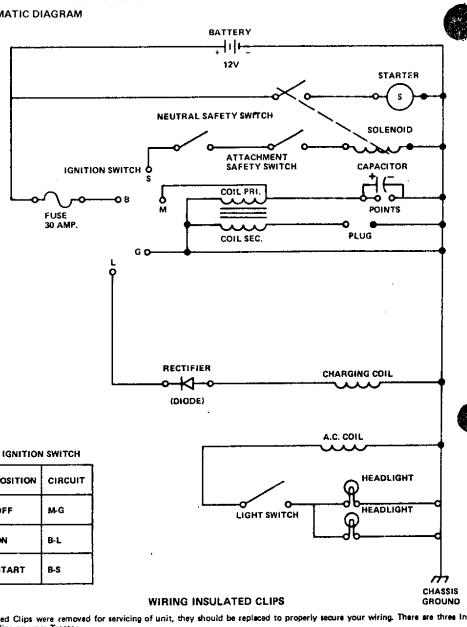

IGNITION SWITCH

POSITION	CIRCUIT
OFF	M-G
ON	B-L
START	B-S

WIRING INSULATED CLIPS

If Insulated Clips were removed for servicing of unit, they should be replaced to properly secure your wiring. There are three Insulated Clips on your Tractor.

1. L.H. side of Tractor for safety switch wires (Key No. 28, page 14).
2. R.H. side of Tractor securing wire harness and cable wire (Key No. 31, page 14).
3. Headlight wire (Key No. 26, page 14).

ELECTRIC & ENGINE

36" RIDING LAWN TRACTOR-MODEL NUMBER L1219AR

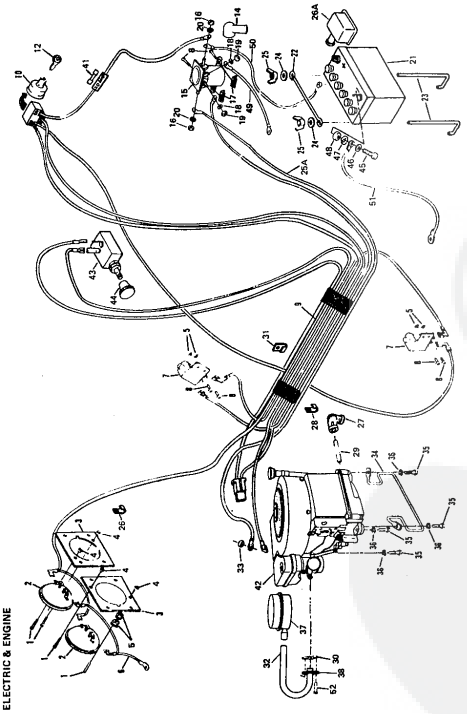

ELECTRIC & ENGINE

36" RIDING LAWN TRACTOR-MODEL NUMBER L1219AR

KEY NO.	PART NO.	DESCRIPTION
1	3226P	Screw, Machine Truss Head No. 10 - 24 x 1
2	6452R	Headlight
3	73025	Headlight Support
4	4632H	Nut, Lock No. 10 - 24
5	9567F	Nut, Keps No. 10 - 24 UNC
6	71706	Wire Assembly
7	7765R	Safety Switch
8	3382P	Screw, Sems, Hex Hd. Thd. Phillips Head No. 10 - 24 x 1/2
9	17972	Wire Harness
10	4648R	Ignition Switch (Inc. Ref No. 12)
12	7952H	Key Set
14	7193J	Terminal Cover
15	7764A	Solenoid
16	538P	*Nut, Hex Jam 5/16 - 24 UNF
17	578P	Nut, Speed No. 10 - 24 UNC
18	1005P	*Screw, Hex 5/16 - 24 UNF
19	543P	*Nut, Hex No. 10 - 32 UNF
20	1003P	* Lockwasher 5/16
21	7823J	Battery
22	67187	Battery Rod
23	70456	Battery Bolt
24	1007P	*Screw, Hex 3/4 x 16 Ga.
25	577P	Wing Nut 1/4 - 20 UNC
25A	13471J	Wire - Solenoid to Starter
26	17972K	Wire - Battery to Frame
26A	2251	Terminal Cover
27	4017P	Std. Elbow 90° 3/8 - 18 NPT
28	5320R	Insulated Clip
29	7765R	Neutral Switch
30	1407J	Exhaust Gasket
31	6784R	Insulated Clip
32	6586J	Exhaust Pipe
33	53490	Nut, Lock 1/4 - 20 UNC
34	1795J	Belt Keeper
35	5868P	Screw, Hex Hd. Thd. Rolling 3/8 - 16 x 1 - 1/2
36	1004P	*Washer, Lock 3/8
37	6772R	Muffler
38	1425J	Exhaust Flange
41	6347R	Fuse - 30 Amp.
42	25270?	Engine - Briggs and Stratton 11 H.P. Type No. 0172-01 (See pages 28 thru 29)
43	7793R	Light Switch
44	7794A	Key Set - Light Switch
45	3003P	*Hex Bolt 1/4 - 20 x 3/4
46	1508P	*Washer 9/32 x 5/8 x 16 Ga.
47	1509P	*Washer 1/4 x 1 Fiber
48	803P	*Hex Nut 1/4 - 20 UNC
49	8027R	Wire - Ground Solenoid
50	6871J	Muffler Clamp
51	596J	Ground Cable
52	31349P	*Hex Bolt 5/16 - 18 x 3/4 Gr. 5
...	1790J	Owners Manual - Battery Hg
...	1790J	Owners Manual

*STANDARD HARDWARE–PURCHASE LOCALLY

OPTIONAL EQUIPMENT

Spark Arrestor Muffler LA249AR

REPAIR PARTS

36" RIDING LAWN TRACTOR–MODEL NUMBER L1219AR

CLUTCH-BRAKE & DRIVE

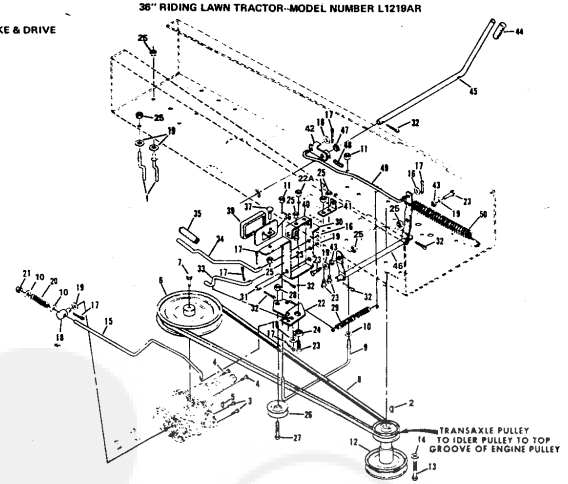

REPAIR PARTS

36" RIDING LAWN TRACTOR–MODEL NUMBER L1219AR

CLUTCH-BRAKE & DRIVE

REF. NO.	PART NO.	DESCRIPTION
1	71200	Belt Guide
2	65053	Key, Woodruff No. 6
3	6059P	Screw, Hex Head w/Washer 5/16 - 18 x 7/8
4	6060P	Screw, Hex Head w/Washer 5/16 - 18 x 1 - 1/8
5	52859	Key, Woodruff No. 61
6	73542	Pulley - Transaxle
7	6058P	Screw, Machine w/Washer 1/4 - 20 x 3/4 Gr. 5
8	73794	V-Belt
9	71241	Mid Belt Guide
10	1611P	Washer, 13/32 x 7/8 x 16 Ga.
11	545P	Locknut 3/8 - 16
12	71923	Pulley - Engine
13	6063P	Screw, Machine w/Ext. Lockwasher 3/8 - 24 x 1 - 3/8
14	1610P	Washer, 3/8 x 1 - 1/4 x 6 Ga.
15	73792	Brake Rod
16	1507P	Washer, 13/32 x 3/4 x 16 Ga.
17	2503P	*Cotter Pin 3/32 x 3/4
18	71238	Trunion
19	1589P	Washer, 11/32 x 3/4 x 16 Ga.
20	71239	Brake Spring
21	591P	Locknut w/Washer 3/8 - 16 UNC
22	71201	Idler Bracket
22A	590P	Locknut w/Washer 5/16 - 18 UNC
23	3010P	*Bolt, Hex Head 5/16 - 18 x 3/4
24	71202	Bushing
25	575P	Nut, Lock 5/16 - 18 UNC
26	67400	Pulley - Idler
27	3027P	*Bolt, Hex Head 3/8 - 16 x 1 - 1/2
28	579P	Nut, Lock 3/8 - 16 UNC
29	2044J	Spring - Idler
30	380J	Foot Pedal
31	71223	Pedal Shaft
32	2506P	*Cotter Pin 1/8 x 1
33	74419	Clutch Rod
34	373J	Park Brake Rod
35	71226	Grip
36	71222	Pedal Plate
37	16P	*Bolt, Carriage 5/16 - 18 x 3/4
39	67365	Foot Pad
40	71199	Pedal Bracket
41	71204	Switch Bracket
42	73229	Clutch Arm Assembly
43	71195	Spacer
44	71246	Grip
45	71242	Clutch Handle
46	71191	Clutch Arm Assembly
47	1545P	Washer, 17/32 x 1 x 16 Ga.
48	52379	Spring Pin 3/16 x 1
49	74474	Blade Clutch Rod
50	71248	Spring

*STANDARD HARDWARE–PURCHASE LOCALLY

REPAIR PARTS

36" RIDING LAWN TRACTOR–MODEL NUMBER L1219AR

CHASSIS

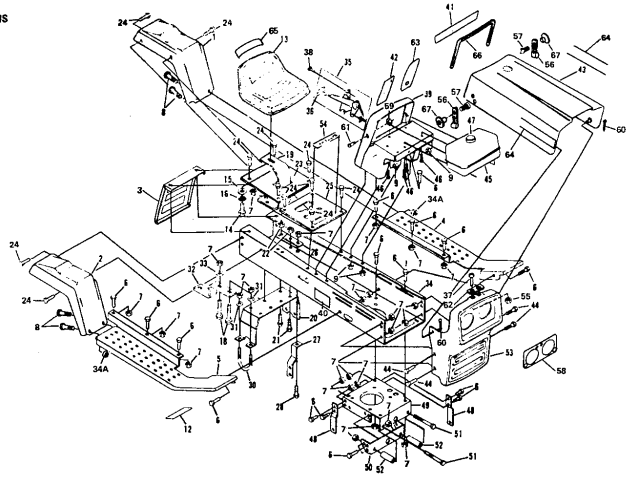

REPAIR PARTS

36" RIDING LAWN TRACTOR–MODEL NUMBER L1219AR

CHASSIS

REF. NO.	PART NO.	DESCRIPTION
1	388J	Fender - L.H.
2	389J	Fender - R.H.
3	1538J	Rear Cover
4	1539J	Foot Rest, L.H.
5	1540J	Foot Rest, R.H.
6	3010P	*Bolt, Hex Head 5/16 - 18 x 3/4
7	575P	Nut, Lock 5/16 - 18 UNC
8	3008P	Bolt, Hex Head 5/16 - 18 x 1/2
9	532P	Nut, Keps 5/16 - 18 UNC
12	1133J	Decal - Clutch and Brake
13	2126J	Seat
14	3043P	*Bolt, Hex Head 1/2 - 13 x 1
15	1546P	Washer 17/32 x 1 - 3/16 x 11 Ga.
16	1000P	*Washer, Lock 1/2
18	3012P	*Bolt, Hex Head 5/16 - 18 x 1 - 1/4 Gr. 5
19	73790	Seat Spring
20	73791	Transaxle Support
21	3023P	*Bolt, Hex Head 3/8 - 16 x 1
22	545P	Nut, Lock 3/8 - 16
23	1750J	Cover Plate
24	5612P	Screw, Hex Hd. Thd. Rolling 5/16 - 18 x 1/2
25	677AB7	Chassis Cover
26	71507	Support
27	71198	Axle Strap
28	3011P	*Bolt, Hex Head 5/16 - 18 x 1
30	71606	Clamp
31	1609P	Washer, 5/16 x 3/4 x 11 Ga.
32	71205	Tow Hitch
33	1610P	Washer,3/8 x 1 - 1/4 x 6 Ga.
34	1320J	Chassis
34A	585P	Keps Jam Nut 5/16 - 18 UNC
35	1544J	Remote Control Ass'y. (Inc. Ref. No. 36)
36	61159	Knob - Remote Control
37	3320P	*Screw, Pan Hd. Machine No. 10 - 24 x 1/2
38	5606P	Screw, Hex Washer Hd. Thd. Cutting 1/4 - 20 x 1/2
39	677A93	Dash Ass'y.
40	243J	Decal, "11"
41	1136J	Decal - Dash, Instructions
42	1135J	Decal - Dash, Controls
43	677A12	Hood Ass'y.
44	3386P	Screw, Hex Washer Hd. 5/16 - 18 x 3/4
45	73427	Fuel Tank
46	5547P	Screw, Thd. Cutting 1/4 - 20 x 3/4
47	74145	Fuel Cap
48	71190	Brake Rod Bracket
49	1839J	Engine Base
50	71178	Rocker Bar Support
51	3271P	*Bolt, Hex Head 5/16 - 18 x 2 - 3/4
52	71431	Bushing
53	374J	Grill Frame
54	74307	Battery Cap
55	4632H	Locknut No. 10 - 24 UNC
56	8889R	Hood Latch
57	3068P	Screw, Phillips P.H. Machine No. 10 - 24 UNC x 3/8
58	602J	Decal - Headlight
59	561P	Nut, Keps No. 10 - 24 UNC
60	2503P	*Cotter Pin 3/32 x 3/4
61	8753R	Hood Latch Pin
62	470J	Hood Bumper
63	1134J	Decal - Dash, L.H.
64	242J	Decal, Hood
65	245J	Decal, Seat Back
66	892J	Hood Strip
67	2029J	Weldnut

*STANDARD HARDWARE–PURCHASE LOCALLY

REPAIR PARTS

36" RIDING LAWN TRACTOR--MODEL NUMBER L1219AR

MOWER

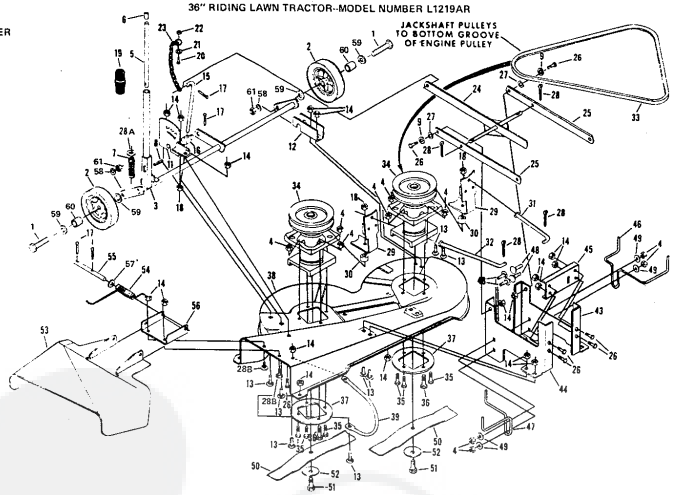

REPAIR PARTS

36" RIDING LAWN TRACTOR--MODEL NUMBER L1219AR

STEERING AND WHEELS

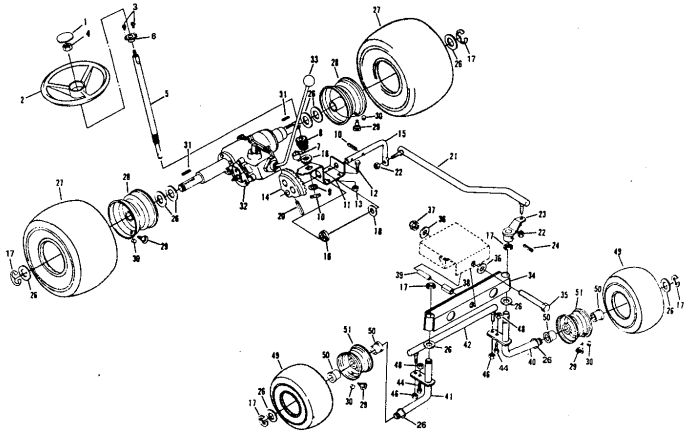

REPAIR PARTS

36" RIDING LAWN TRACTOR--MODEL NUMBER L1219AR

MOWER

REF. NO	PART NO	DESCRIPTION
1	3199P	Hex Bolt 3/8 - 24 x 2 - 3/4 Gr. 5
2	9536H	Gauge Wheel
3	677A134	Pivot Rod Assembly
4	545P	Nut, Lock 3/8 - 16 UNC
5	1663J	Rod - Plunger
6	9479R	Cap - Lever Plunger
7	71669	Spring
8	8540R	Pin - Drive Lork
9	1699P	Washer, 11/32 x 3/4 x 16 Ga.
11	72937	Quadrant Assembly
12	67337	Pivot Rod Support
13	67P	*Bolt, Carriage 5/16 - 18 x 3/4 Gr. 5
14	575P	Nut, Lock 5/16 - 18 UNC
15	71300	Adjustment Rod
16	71301	Trunion
17	2503P	*Cotter Pin 3/32 x 3/4
18	581P	Locknut w/Washer 3/8 - 16 UNC
19	1747J	Grip, Handle
20	3224P	*Screw, Pan Hd. Machine 1/4 - 20 x 1
21	1575P	Washer, 9/32 x 1 x 16 Ga.
22	574P	Nut, Hex Lock 1/4 - 20 UNC
23	74014	Sway Chain
24	72915	Parallel Rod Assembly
25	71297	Parallel Link
26	3010P	*Bolt, Hex Head 5/16 - 18 x 3/4
27	71616	Spacer
28	2506P	*Cotter Pin 1/8 x 1
28A	1615P	Washer, 15/32 x 3/4 x 16 Ga
28B	5P	*Bolt, Carriage Sh. Shoulder 5/16 - 18 x 3/4
29	677A46	Brake Assembly
30	71522	Spacer, Brake Spring
31	71525	Brake Rod - L.H.
32	71524	Brake Rod - R.H.
33	62828	Belt
34	677A181	Jackshaft Assembly
35	3023P	*Bolt, Hex Head 3 8 - 16 x 1
36	3027P	*Bolt, Hex Head 3 8 - 16 x 1 - 1 2
37	71575	Plate
38	677A88	Housing w/Silk Screening
39	71647	Housing Skid
43	71276	Housing Bracket - L.H.
44	71277	Housing Bracket - R.H.
45	71278	Channel
46	71298	Belt Keeper - L.H.
47	71299	Belt Keeper - R.H.
48	20P	*Bolt, Carriage 3/8 - 16 x 1
49	1614P	Washer, 13/32 x 7/8 x 13 Ga.
50	71285	Blade
51	6065P	Screw, Hex Head w/Washer - Nylon Patch 3/8 - 24 x 7/8 Gr. 5
52	67354	Washer, 25/64 x 2 - 3/8 x 5/32
53	677A89	Deflector (Discharge Guard)
54	71526	Deflector Spring
55	71565	Hinge Rod
56	71528	Bracket-Deflector
57	1623P	Washer 11/32 x 7/8 x 16 Ga.
58	1004P	Lockwasher 3/8
59	1513P	Washer 13/32 x 13/16 x 16 Ga.
60	7375H	Bushing
61	515P	Hex Nut 3/8 - 24 UNF

*STANDARD HARDWARE--PURCHASE LOCALLY

REPAIR PARTS

36" RIDING LAWN TRACTOR--MODEL NUMBER L1219AR

STEERING AND WHEELS

REF. NO.	PART NO.	DESCRIPTION
1	1114J	Steering Wheel Insert
2	506J	Steering Wheel
3	5614P	Hex Washer Hd. Sht. Metal Screw No. 10 x 1/2 Type AB
4	588P	*Nut, Hex Jam 1/2 - 20 UNF
5	1595J	Steering Shaft
6	1554J	Bushing
7	74580	Shaft Spacer
8	74581	Pinion Gear
9	1635P	Washer, 5/8 x 1-1/2 x 11 Ga.
10	52379	Spring Pin 3/16 x 1
11	74577	Steering Bracket
12	3010P	*Bolt, Hex Head 5/16 - 18 x 3/4
13	575P	Nut, Lock 5/16 - 18 UNC
14	71172	Gear
15	1528J	Steering Rod
16	71208	Bushing
17	5000P	E-Ring
18	1618P	Washer, 21/32 x 1 - 1/4 x 13 Ga. (0 - 2 as Req'd.)
20	73446	Drive - Lock Pin
21	71219	Drag Link
22	7810H	Locknut, Hex 3/8 - 24 UNF
23	71185	Steering Arm Assembly
24	62079	Spring Pin 1/4 x 1 - 1/4
26	1582P	Washer 25/32 x 1 - 1/4 x 16 Ga.
27	71653	Tire (18.00 - 9.50 x 8)
28	71652	Rim
29	65139	Valve Stem
30	59192	Valve Cap
31	66414	Square Key 3/16 x 2
32	794191A	Transaxle Assembly Model 143.658A (See Pages 24 and 25)
33	55862	Knob - Transmission
34	677A01	Rocker Bar Assembly
35	3385P	Bolt, Hex Head 1/2 - 13 x 3
36	1613P	Washer, 17/32 x 7/8 x 16 Ga.
37	581P	Nut, Lock 1/2 - 13 UNC
38	67151	Bushing
39	71188	Pivot Spacer
40	73235	Kingpin Assembly - L.H.
41	73237	Kingpin Assembly - R.H.
42	73240	Tie Rod
44	3021P	*Bolt, Hex Head 3/8 - 16 x 3/4
46	582P	Nut, Lock 5/16 - 24 UNF
48	579P	Nut, Lock 3/8 - 16 UNC
49	71651	Tire (15 x 6.00 x 6)
50	526J	Bearing
51	677A98	Rim Ass'y. (Inc. Ref. No. 50)

* STANDARD HARDWARE--PURCHASE LOCALLY

REPAIR PARTS

36" RIDING LAWN TRACTOR–MODEL NUMBER L1219AR
TRANSAXLE–MODEL NUMBER 143.658A

ALL TRANSAXLE PARTS MUST BE PURCHASED THROUGH AND SERVICE PERFORMED BY YOUR LOCAL TECUMSEH DEALER.

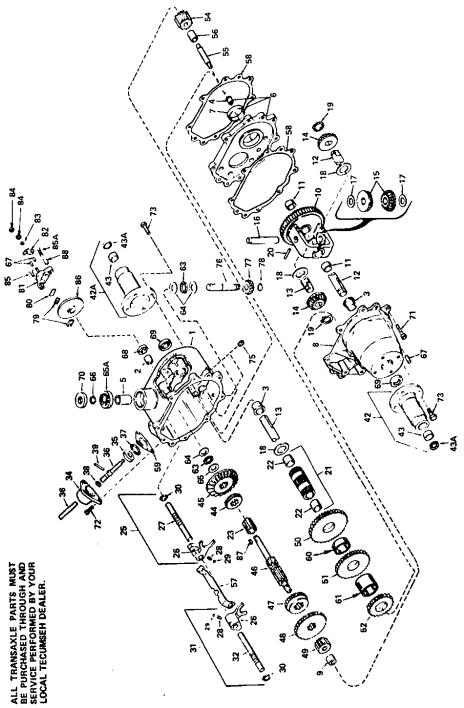

KEY NO.	PART NO.	DESCRIPTION
1	770137A	Complete Transaxle
2	770083	Gear Assy., Transaxle (Inc. No's. 2, 3 & 5)
3	780086	Bearing, Needle
4	780060	Bearing, Bronze
5	780061	Bearing, Bronze
6	780063	Bearing, Needle Transaxle (Inc. No's. 4 & 7)
7	780062	Bearing, Bronze
8	780053	Gear Assy., Transaxle (Inc. No's. 3 & 9)
9	780053	Gear Assy., Differential (Inc. No. 11)
10	774221	Axle, Right Hand
11	774221	Axle, Left Hand
12	780057	Gear, Bevel Hand
13	778661	Gear, Bevel
14	778068	Pinion, Bevel
15	780058	Pin, Dowel
16	780065	Washer, Thrust
17	780066	Washer, Thrust
18	780038	Ring, Snap
19	780040	Pin, Roll
20	780060	Gear Assy., Countershaft (Inc. 2 of No. 22)
21	780062	Bearing, Bronze
22	780060	Countershaft (25 Teeth)
23	780065	Washer, Thrust
24	780064	Washer, Thrust
25	784079	Rod Assy., Shift (1st & Rev.) (Inc. No's. 26 & 30)
26	784004	Fork, Shift
27	784003	Rod, Shift
28	784002	Ball, Steel
29	784004	Fork, Shift
30	784084	Rod Assy., Shift (2nd & 3rd (Inc. No's. 26, 29, 31, 32 & 33)
31	784084	Rod Assy., Shift (2nd & 3rd (Inc. No's. 26, 29, 30 & 32)
32	784085	Plate, Shift Lever
33	784088	Housing, Shift Lever
34	784086	Lever, Shift Lever
35	784294	Lever, Shift
36	784087	Ring, Snap
37	792016	Pin, Roll
39	792049	Pin, Drive
42	783045	Housing Assy., Axle (Inc. No's. 43 & 43A)
42A	783045	Housing Assy., Axle (Inc. No's. 43 & 43A)
43	783045	Bearing, Needle
43A	783045	Seal (Oil)
44	778024	Gear (16 Teeth)
45	778039	Gear, Bevel (13 Teeth)
46	778059	Shaft, Transaxle Bevel
47	778058	Gear, Shifting (2nd & 3rd
48	778059	Gear, Shifting (1st & Rev.)
49	778060	Gear, Spur (12 Teeth)
50	778140	Gear, Countershaft Drive (38 Teeth)
51	778064	Gear, Countershaft (13 Teeth)
52	778142	Gear, Countershaft (25 Teeth)
53	778054	Gear, Bevel
54	778061	Shaft, Reverse Idler
55	778062	Gear, Reverse Idler
56	788036	Spacer, Reverse Idler
57	788035	Gasket, Case & Cover
58	788033	Spacer
59	788079	Gasket, Shift Lever Housing
60	788078	Spacer
61	780078	Bearing, Thrust
62	780077	Washer, Thrust
63	780072	Washer, Thrust
64	780073	Washer, Thrust
65	780074	Bearing, Ball
66	792035	Ring, Snap
68	792040	Washer, Flat
68A	780043	Seal, Oil
69	788039	Seal, Oil
70	792037	Screw, Flanged Hex Hd. 1/4 - 20 x 1 - 1/4
71	792038	Screw, Flanged Hex Hd. 1/4 - 20 x 1 - 1/4
72	792037	Screw, Hex Hd., Sems 5/16 - 18 x 1
73	792033	Plug, Pipe 1/8
75	792039	Plug, Pipe 1/4
76	778077	Pinion, Input
77	778077	Pinion, Countershaft
78	780046	Pad, Brake
79	780006	Plate, Brake Pad
80	790007	Pin, Cotter (Hair)
81	790004	Lever, Brake
82	790008	Washer, Flat
83	792018	Nut, Lock
84	792075	Screw, Hex Hd., Sems 5/16 - 18 x 1
85	792073	Screw, Hex Hd. Cap 1/4 - 20 x 1 - 1/4
85A	792085	Screw, Hex Hd. Cap 1/4 - 20 x 2 - 1/4
86	790009	Dial, Brake
87	792045	Key, Woodruff No. 61
88	792046	Spacer

REPAIR PARTS

36" RIDING LAWN TRACTOR–MODEL NUMBER L1219AR
TRANSAXLE–MODEL NUMBER 143.658A

REPAIR PARTS

36" RIDING LAWN TRACTOR–MODEL NUMBER L1219AR
BRIGGS & STRATTON 11 H.P. ENGINE–MODEL NO. 252707, TYPE NO. 0172-01

CYLINDER, CRANKSHAFT AND ENGINE BASE GROUP

ALL ENGINE PARTS MUST BE PURCHASED THROUGH AND SERVICE PERFORMED BY YOUR LOCAL BRIGGS AND STRATTON DEALER.

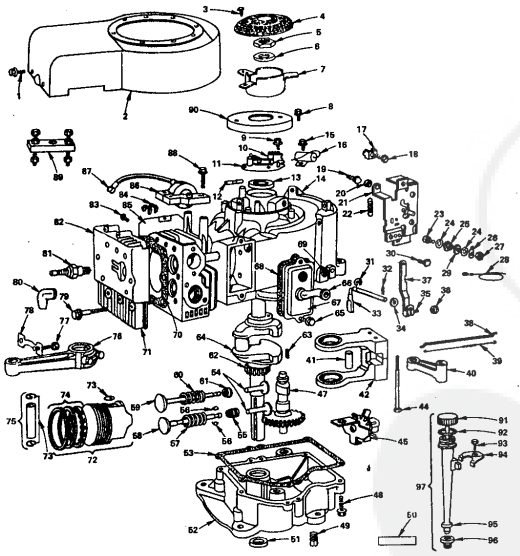

REPAIR PARTS

36" RIDING LAWN TRACTOR–MODEL NUMBER L1219AR
BRIGGS & STRATTON 11 H.P. ENGINE–MODEL NO. 252707, TYPE NO. 0172-01

CYLINDER, CRANKSHAFT AND ENGINE BASE GROUP

KEY NO.	PART NO.	DESCRIPTION
1	93158	Screw - Blower Housing Mounting Sem
2	391556	Housing - Blower
3	93808	Screw - Sem
4	222582	Screen - Flush Rotating
5	92284	Nut - Hex
6	220865	Washer - Spring
7	222561	Cup - Screen Mounting
8	93014	Screw - Sem
9	93276	Screw - Breaker Adjusting Sem
10	28018	Breaker Arm
11	391284	Breaker Ass'y. - Ignition (Inc. No. 10)
12	65704	Plunger - Breaker Point
13	391086	Seal - Oil
14	393409	Cylinder Ass'y. (Inc. No. 13)
15	93042	Screw - Sem
16	391702	Condenser
17	221535	Clamp - Casing
18	93496	Screw - Sem
19	93686	Screw - Control Bracket Mounting
20	231039	Spacer - Control Bracket Mounting
21	390682	Plate - Gov. Control
22	261306	Spring - Governor
23	91920	Screw - Terminal
24	92791	Washer - Lock - Shakeproof
25	86554	Collar - Insulating
26	93722	Terminal - Spade
27	90576	Nut - Hex 8 - 32
28	391602	Wire - Ground
29	66068	Washer - Insulating
30	93572	Screw
31	93307	Retainer - E-Ring
32	93306	Cotter - Hair Pin
33	231058	Crank - Governor (1/4" Dia.)
34	222450	Washer - Gov. Crank (1/4" I.D.)
35	92613	Bolt - Governor Lever
36	231082	Nut - Hex, 10 - 24
37	391733	Lever Ass'y. - Governor (for 1/4" Dia. Crank) (Inc. No's. 35 & 36)
38	261198	Link - Governor
39	261197	Spring - Governor Link
40	211675	Link - Counterweight
41	298909	Pin - Counterweight
42	391373	Counterweight Ass'y. (Inc. No. 41)
44	93875	Screw - Counterweight
45	391704	Oil Slinger, Gov. Gear & Bracket Ass'y.
47	212296	Gear - Cam
48	93585	Screw - Sump Mounting Sem
49	91084	Plug - Oil Drain
50	393411	Gasket Set
51	291675	Seal - Oil
52	391784	Sump - Oil (Inc. No's. 51 & 53)
53	270808	*Gasket - Crankcase Cover - 1/64" Thick
	270915	*Gasket - Crankcase Cover - .005" Thick
	270916	*Gasket - Crankcase Cover - .009" Thick
54	261183	Tappet - Valve
55	292260	Rotocoil - Exhaust Valve
56	93630	Retainer - Exhaust Valve Rotocoil
57	26828	Spring - Exhaust Valve
58	261185	Valve - Exhaust
59	261462	Valve - Intake
60	69806	Spring - Intake Valve
61	221566	Retainer - Intake Valve
62	261196	Gear - Timing
63	61760	Key - Flywheel
64	391704	Crankshaft
65	93394	Screw - Sem
66	280100	Tube - Breather
67	391406	Breather Assembly
68	27803	*Gasket - Valve Cover
69	231055	Bushing - Gov. Crank (1/4" I.D.)
70	271075	*Gasket - Cylinder Head
71	212300	Head - Cylinder
72	391285	Piston Ass'y. - Standard (Inc. No's. 73 & 74)
	391287	Piston Ass'y. - .010" O.S.
	391288	Piston Ass'y. - .020" O.S.
	391289	Piston Ass'y. - .030" O.S.
73	260924	Lock - Piston Pin
74	391780	Ring Set - Piston - Std.
	391781	Ring Set - Piston - .010" O.S.
	391782	Ring Set - Piston - .020" O.S.
	391783	Ring Set - Piston - .030" O.S.
75	296691	Pin Ass'y. - Piston - Std. (Inc. No. 73)
	351786	Pin Ass'y. - Piston - .005" O.S.
76	391775	Rod Ass'y. - Connecting (Inc. 77 & 78)
77	92909	Screw - Conn. Rod
78	222299	Lock - Conn. Rod Screw
79	93723	Screw - Cylinder Head (3" Long)
		NOTE: 93781 Stud - Cylinder Head 22963 Washer
80	66538	Elbow - Spark Plug
81	298809	Plug - Spark (1 - 1/2" High - 37 - 42 MM)
		NOTE: Spark Plugs use Ignition Cable Terminal No. 221788.
82	222725	Cover - Cylinder Head
83	93163	Screw - Cylinder Shield Mtg. Sem
84	221907	Clip - Wire
85	222744	Shield - Cylinder
86	298968	Armature Ass'y.
87	221798	Terminal - Ignition Cable
88	93381	Screw - Armature Mounting Sem
89	16203	Puller - Flywheel
90	222309	Cover - Breaker Point
91	391841	Cap and Dipstick - Oil Filler
92	270920	Seal - Filler Cap
93	93804	Screw - Clamp Mtg.
94	222502	Clamp - Oil Filler Tube
95	280134	Tube - Oil Filler
96	68838	Seal - Filler Tube
97	392057	Filler Group - Oil

*STANDARD HARDWARE–PURCHASE LOCALLY

REPAIR PARTS

36" RIDING LAWN TRACTOR--MODEL NUMBER L1219AR
BRIGGS & STRATTON 11 H.P. ENGINE--MODEL NO. 252707, TYPE NO. 0172-01

AIR CLEANER AND CARBURETOR

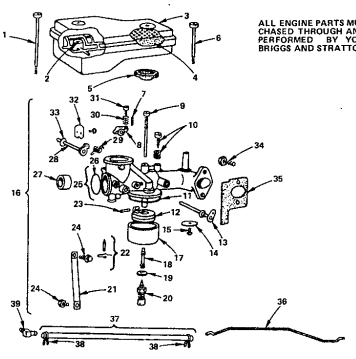

ALL ENGINE PARTS MUST BE PURCHASED THROUGH AND SERVICE PERFORMED BY YOUR LOCAL BRIGGS AND STRATTON DEALER.

KEY NO.	PART NO.	DESCRIPTION
1	93323	Screw - Air Cleaner
2	280118	Support - Air Cleaner Element
3	391786	Cleaner Ass'y. - Air (Inc. No's. 2 & 4)
4	270843	Element - Air Cleaner
5	270853	Gasket - Air Cleaner
6	93822	Screw - Air Cleaner
7	93043	Pin - Throttle Stop
8	211712	Stop - Throttle
9	296740	Nozzle - Carburetor
10	292681	+Valve Ass'y. - Carburetor Idle
11	270511	+Gasket - Float Bowl
12	298707	Float - Carburetor
13	391512	Shaft & Lever - Throttle
14	222858	Valve - Throttle
15	93499	Screw - Throttle & Choke Valve Mtg. Sem
16	393410	Carburetor Ass'y. (Choke-A-Matic) (Inc. No's. 7 thru 33)
17	221995	Bowl - Float
18	230932	+Screw - Nozzle
19	222014	+Washer - Float Bowl
20	391233	+Valve - Needle
21	222311	Bracket - Carburetor
22	299098	+Valve - Fuel Inlet
23	230896	+Pin - Float Hinge
24	93572	Screw
25	391787	Body Ass'y. - Carburetor (Inc. No. 26)
26	221997	+Plug - Welch
27	211960	Venturi - Carburetor
28	390684	Shaft & Lever - Choke
29	261116	Spring - Choke Return
30	26157	Spring - Throttle Adjustment
31	91920	Screw - Machine, Fill. Hd. 8 - 32 x 5/8"
32	222010	Valve Choke
33	270382	Washer - Choke Shaft
34	93357	Screw - Carburetor Mtg.
35	270872	*Gasket - Carburetor Mtg.
36	261274	Link - Choke
37	296004	Pipe - Fuel (Inc. No. 38)
38	93053	Clamp - Fuel Pipe
39	67218	Connector - Fuel Pipe

+INCLUDED IN CARBURETOR OVERHAUL KIT - PART NO. 299852

*INCLUDED IN GASKET SET - PART NO. 393411

REPAIR PARTS

36" RIDING LAWN TRACTOR--MODEL NUMBER L1219AR
BRIGGS & STRATTON 11 H.P. ENGINE--MODEL NO. 252707, TYPE NO. 0172-01

ALTERNATOR AND STARTER MOTOR GROUP

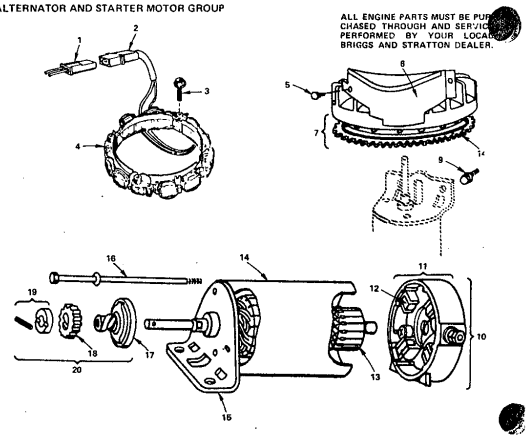

ALL ENGINE PARTS MUST BE PURCHASED THROUGH AND SERVICE PERFORMED BY YOUR LOCAL BRIGGS AND STRATTON DEALER.

KEY NO.	PART NO.	DESCRIPTION
1	393352	Alt. Harness Assembly
2	393456	Diode and Conn. Assembly
3	93621	Screw - Sem
4	393474	Stator - Alternator
5	93410	Screw - Sem
6	390233	Cover and Shield - Starter
7	391988	Flywheel & Ring Gear Ass'y. - Magneto (Inc. No. 14)
8	392134	Gear - Ring (Inc. Mounting Parts)
9	93523	Screw - Sem
10	392749	Motor and Drive Ass'y. (12 Volt) (Inc. No's. 11 thru 20)
11	390846	End Cap Ass'y. Commutator (Inc. No. 12).
12	391705	Brush Ass'y.
13	390837	Armature Ass'y.
14	392744	Housing Ass'y.
15	392061	End Cap Ass'y. Drive
16	391706	Thru Bolt Ass'y.
17	391135	Clutch Ass'y.
18	280104	Gear
19	391462	Retainer & Pin
20	391461	Drive Ass'y. (Inc. No's. 17, 18 & 19)

REPAIR PARTS

ELECTRIC & ENGINE

36" RIDING LAWN TRACTOR--MODEL NUMBER L1218AR

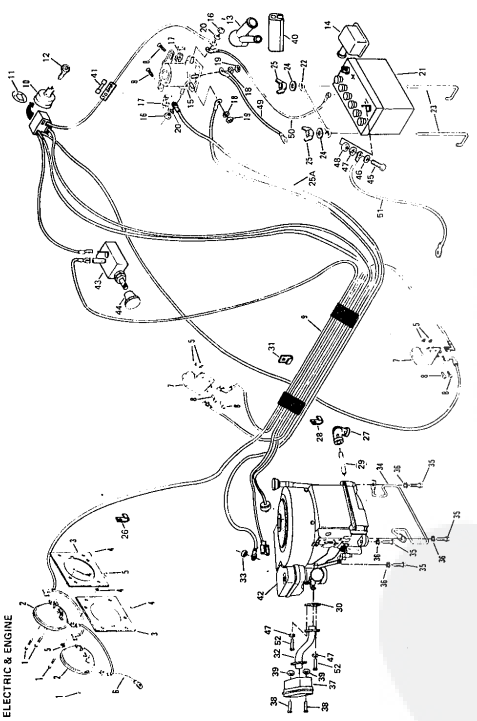

KEY NO.	PART NO.	DESCRIPTION
1	65421	Screw, Machine Truss Head No. 10 - 24 x 1
2	64529R	Headlight
3	73025	Headlight Support
4	53491	Nut, Lock No. 10 - 24
5	65618	Nut, Keps No. 10 - 24
6	71106	Wire Assembly
7	77558R	Safety Switch
8	3839P	Screw, Machine Phillips Head No. 10 - 24 x 1/2
9	478J	Wire Harness
10	64528R	Ignition Switch (Inc. Ref No. 12)
11	8607R	Terminal Identifier
12	7552H	Key Set
13	252J	Terminal Cover (Dual)
14	252J	Terminal Cover
15	77564R	Solenoid
16	538P	*Nut, Hex Jam 5/16 - 24
17	6408P	*Screw, Hex Hd. 5/16 - 24
18	1006P	*Washer, Lock No. 10
19	543P	*Nut, Hex No. 10 - 32
20	1505P	*Lockwasher 8/16
21	228J	Battery
22	67187	Battery Rod
23	67185	Battery Clamp
24	53847	Washer .265 x .750 x .063
25	92231	Wing Nut 1/4 - 20
26	2931R	Wire Harness to Starter
		Insulated Clip
		Std. Elbow 90° 3/8 - 18 NPT
		Insulated Clip
		Nipple
		Exhaust Gasket
		Insulated Clip
		Exhaust Tube
		Nut, Lock 1/4 - 20
		Belt Keeper
		Screw, Hex Hd. Thd. Rolling
		Starter - 12 V
		*Washer, Lock 3/8
		Muffler
		Washer, 5/16 - 18 x 2 - 3/4
		Nut, Keps 5/16 - 18
		Solenoid Insulator
		Gear - Starter
		Engine - Briggs and Stratton 8 H.P. Type No. 5607-01 (See page 26 thru 28)
		Light Switch
		Key - Light Switch
		*Hex Bolt 1/4 - 20 x 3/4
		*Washer 9/32 x 5/8 x 16 Ga.
		*Lockwasher 1/4
		*Hex Nut 1/4 - 20
		Wire - Ground Solenoid
		Battery Cable
		Ground Cable
		Screw, Hex Hd. 1/4 - 20 x .62
		Owners Manual
		*STANDARD HARDWARE - PURCHASE LOCALLY

REPAIR PARTS

ELECTRIC & ENGINE

36" RIDING LAWN TRACTOR--MODEL NUMBER L8218AR

KEY NO.	PART NO.	DESCRIPTION
1	65421	Screw, Machine Truss Head No. 10 - 24 x 1
2	64529R	Headlight
3	73025	Headlight Support
4	53491	Nut, Lock No. 10 - 24
5	65618	Nut, Keps No. 10 - 24
6	71106	Wire Assembly
7	77558R	Safety Switch
8	3839P	Screw, Machine Phillips Head No. 10 - 24 x 1/2
9	478J	Wire Harness
10	64528R	Ignition Switch (Inc. Ref No. 12)
11	8607R	Terminal Identifier
12	7552H	Key Set
13	252J	Terminal Cover (Dual)
14	252J	Terminal Cover
15	77564R	Solenoid
16	538P	*Nut, Hex Jam 5/16 - 24
17	6408P	*Screw, Hex No. 5/16 - 24
18	1006P	*Washer, Lock No. 10
19	543P	*Nut, Hex No. 10 - 32
20	1505P	*Lockwasher 8/16
21	228J	Battery
22	67187	Battery Rod
23	67185	Battery Clamp
24	53847	Washer .265 x .750 x .063
25	92231	Wing Nut 1/4 - 20
26	2931R	Wire Harness to Starter
		Insulated Clip
		Std. Elbow 90° 3/8 - 18 NPT
		Insulated Clip
		Nipple
		Exhaust Gasket
		Insulated Clip
		Exhaust Tube
		Nut, Lock 1/4 - 20
		Belt Keeper
		Screw, Hex Hd. Thd. Rolling
		Starter - 12 V
		*Washer, Lock 3/8
		Muffler
		Washer, 5/16 - 18 x 2 - 3/4
		Nut, Keps 5/16 - 18
		Solenoid Insulator
		Gear - Starter
		Engine - Briggs and Stratton 8 H.P. Type No. 5607-01 (See page 26 thru 28)
		Light Switch
		Key - Light Switch
		*Hex Bolt 1/4 - 20 x 3/4
		*Washer 9/32 x 5/8 x 16 Ga.
		*Lockwasher 1/4
		*Hex Nut 1/4 - 20
		Wire - Ground Solenoid
		Battery Cable
		Ground Cable
		Screw, Hex Hd. 1/4 - 20 x .62
		Owners Manual
		*STANDARD HARDWARE - PURCHASE LOCALLY

REPAIR PARTS

36" RIDING LAWN TRACTOR–MODEL NUMBER L8218AR

CLUTCH-BRAKE & DRIVE

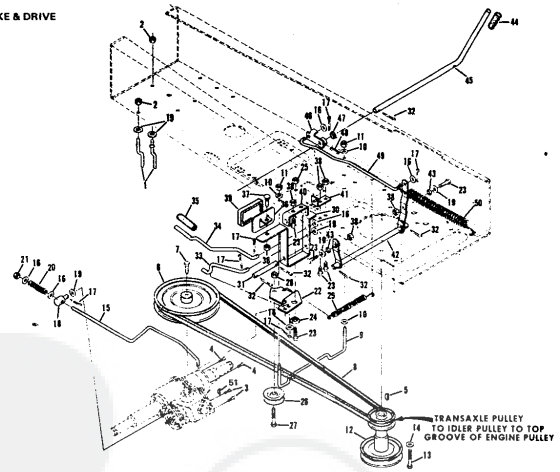

REPAIR PARTS

36" RIDING LAWN TRACTOR–MODEL NUMBER L8218AR

CLUTCH-BRAKE & DRIVE

KEY NO.	PART NO.	DESCRIPTION
1	71200	Belt Guide
2	54922	Nut, Keps 5/16 - 18
3	68205	Screw, Hex Head w/Washer 5/16 - 18 x 7/8
4	68206	Screw, Hex Head w/Washer 5/16 - 18 x 1 - 1/8
5	65053	Key, Woodruff No. 6
6	73542	Pulley - Transaxle
7	6058P	Screw, Machine w/Washer 1/4 - 20 x 3/4 Gr. 5
8	73794	Belt
9	71241	Mid Belt Guide
10	51785	Washer, .400 x .875 x .063
11	55615	Nut, Lock 3/8 - 16
12	71523	Pulley - Engine
13	68874	Screw, Machine w/Washer Nylon 3/8 - 24 x 1 - 3/8
14	62735	Washer, .375 x 1.250 x .201
15	73792	Brake Rod
16	53998	Washer, .406 x .750 x .063
17	2503P	*Cotter Pin 3/32 x 3/4
18	71238	Trunion
19	50806	Washer, .328 x .750 x .063
20	71239	Brake Spring
21	62336	Nut, Lock 3/8 - 16
22	71201	Idler Bracket
23	3010P	*Bolt, Hex Head 5/16 - 18 x 3/4
24	71202	Bushing
25	63124	Nut, Lock 5/16 - 18
26	67400	Pulley - Idler
27	3027P	*Bolt, Hex Head 3/8 - 16 x 1 - 1/2
28	65543	Nut, Lock 3/8 - 16
29	383J	Spring - Idler
30	390J	Foot Pedal
31	71223	Pedal Shaft
32	2506P	*Cotter Pin 1/8 x 1
33	74419	Clutch Rod
34	373J	Park Brake Rod
35	71226	Grip
36	71222	Pedal Plate
37	16P	*Bolt, Carriage 5/16 - 18 x 3/4
38	67818	Nut, Lock 5/16 - 18
39	67365	Foot Pad
40	71189	Pedal Bracket
41	71204	Switch Bracket
42	71191	Clutch Arm Assembly
43	71195	Spacer
44	71246	Grip
45	71242	Clutch Lever
46	73229	Clutch Arm Assembly
47	53632	Washer, .531 x 1 x .063
48	52379	Spring Pin 3/16 x 1
49	74474	Blade Clutch Rod
50	71248	Spring
51	52859	Key, Woodruff No. 61

*STANDARD HARDWARE–PURCHASE LOCALLY

REPAIR PARTS

36" RIDING LAWN TRACTOR–MODEL NUMBER L8218AR

CHASSIS

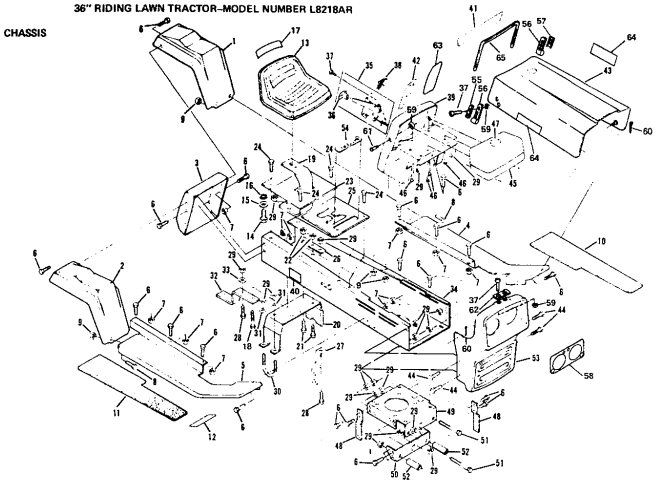

REPAIR PARTS

36" RIDING LAWN TRACTOR–MODEL NUMBER L8218AR

CHASSIS

KEY NO.	PART NO.	DESCRIPTION
1	388J	Fender - L.H.
2	389J	Fender - R.H.
3	677A15	Rear Cover Ass'y.
4	386J	Foot Rest - L.H.
5	387J	Foot Rest - R.H.
6	3010P	*Bolt, Hex Head 5/16 - 18 x 3/4
7	67818	Nut, Lock 5/16 - 18
8	54262	Screw, Hex Head w/Washer 5/16 - 18 x 5/8
9	65221	Nut, Lock 5/16 - 18
10	73302	Foot Rest Pad, L.H.
11	73303	Foot Rest Pad, R.H.
12	376J	Decal - Clutch and Brake
13	476J	Seat
14	3042P	*Bolt, Hex Head 1/2 - 13 x 1
15	53084	Washer, .531 x 1.187 x .127
16	1000P	*Washer, Lock 1/2
17	245J	Decal - Seat
18	52404	Bolt, Hex Head 5/16 - 18 x 1 - 1/4
19	73790	Seat Spring
20	73791	Transaxle Support
21	3023P	*Bolt, Hex Head 3/8 - 16 x 1
22	65543	Nut, Lock 3/8 - 16
23	393J	Cover Plate
24	71263	Screw, Hex Hd. Thd. Cutting 5/16 - 18 x 1/2
25	677A53	Chassis Cover
26	71507	Support
27	71198	Axle Strap
28	3011P	*Bolt, Hex Head 5/16 - 18 x 1
29	67818	Nut, Lock 5/16 - 18
30	71606	Clamp
31	59944	Washer, .312 x .750 x .127
32	71205	Tow Hitch
33	62735	Washer, .375 x 1.250 x .201
34	73788	Chassis
35	74666	Throttle Control Lever (Inc. Key No. 36)
36	61159	Knob - Throttle Control
37	6005P	*Screw, Machine No. 10 - 24 x 1/2
38	60891	Nut, Speed No. 10 - 24
39	677A13	Dash Weldment
40	75078	Decal - 8"
41	655J	Decal - Dash Instructions-
42	482J	Decal - Dash Controls
43	677A12	Hood Weldment
44	71949	Screw, Hex Washer Hd. 5/16 - 18 x 3/4
45	73427	Fuel Tank
46	68346	Screw, Thd. Cutting 1/4 - 20 x 3/4
47	74145	Fuel Cap
48	71190	Brake Rod Bracket
49	71177	Engine Base
50	71178	Rocker Bar Support
51	3271P	*Bolt, Hex Head 5/16 - 18 x 2 - 3/4
52	71431	Bushing
53	374J	Grill Frame
54	74307	Battery Cap
55	8935R	Hood Latch Cover - R.H.
56	8899R	Hood Latch
57	9015R	Hood Latch Cover - L.H.
58	602J	Decal - Headlight
59	4632H	Locknut No. 10 - 24
60	2503P	*Cotter Pin 3/32 x 3/4
61	8753R	Hood Latch Pin
62	470J	Hood Bumper
63	481J	Decal - Dash - L.H.
64	242J	Decal, Hood Sides
65	892J	Hood Strip
...	941J	Warranty Tag

*STANDARD HARDWARE -PURCHASE LOCALLY

REPAIR PARTS

36" RIDING LAWN TRACTOR–MODEL NUMBER L8218AR

MOWER

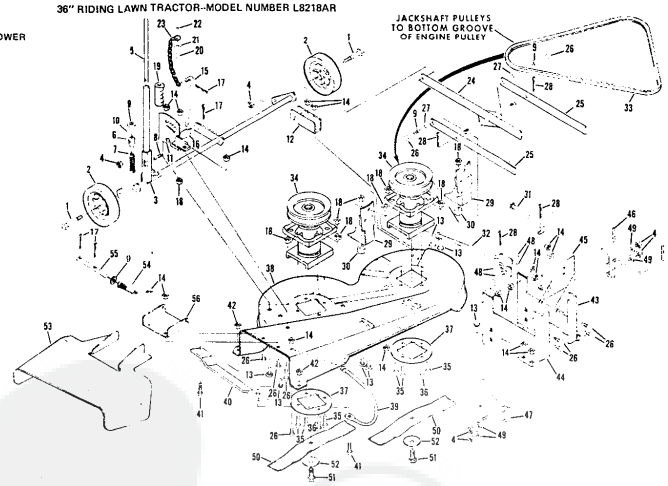

REPAIR PARTS

36" RIDING LAWN TRACTOR–MODEL NUMBER L8218AR

STEERING & WHEELS

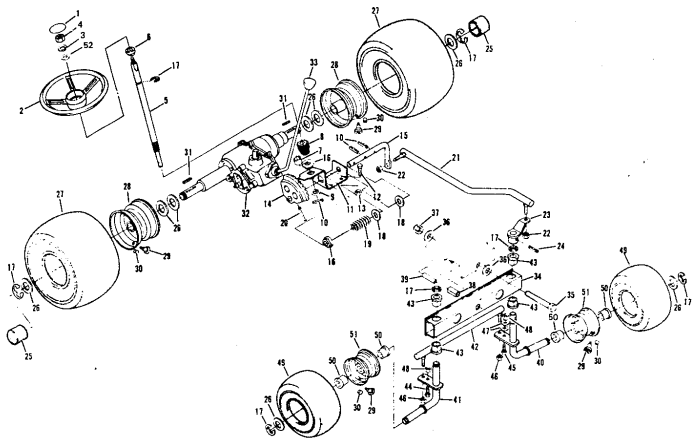

REPAIR PARTS

36" RIDING LAWN TRACTOR–MODEL NUMBER L8218AR

MOWER

KEY NO.	PART NO.	DESCRIPTION
1	60838	Axle Bolt
2	63668	Gauge Wheel
3	71671	Pivot Rod Assembly
4	65541	Nut, Lock 3/8 - 16
5	73961	Rod
6	71658	Plunger
7	71659	Spring
8	54980	Spring Pin – Slotted 1/4 x 1 - 1/2
9	50808	Washer, .328 x .750 x .063
10	52870	Spring Pin 1/8 x 5/8
11	72017	Quadrant Assembly
12	67317	Pivot Rod Support
13	19P	Bolt, Carriage 5/16 - 18 x 5/8
14	67818	Nut, Lock 5/16 - 18
15	71300	Adjustment Rod
16	71301	Trunion
17	2503P	*Cotter Pin 3/32 x 3/4
18	67316	Nut, Lock 3/8 - 16
19	71677	Grip
20	3275P	Phillips Pan Hd. Machine Screw 1/4 - 20 x 1
21	65120	Washer, .266 x 1 x .063
22	53480	Nut, Lock 1/4 - 20
23	74014	Sway Chain
24	72915	Parallel Rod Assembly
25	71297	Parallel Link
26	3010P	*Bolt, Hex Head 5/16 - 18 x 3/4
27	71616	Spacer
28	2508P	*Cotter Pin 1/8 x 1
29	73559	Brake Spring Assembly
30	71522	Spacer, Brake Spring
31	71525	Brake Rod - L.H.
32	71524	Brake Rod - R.H.
33	62828	Belt
34	677A14	Jackshaft Assembly
35	3023P	*Bolt, Hex Head 3/8 - 16 x 1
36	3027P	*Bolt, Hex Head 3/8 - 16 x 1 - 1/2
37	71575	Plate
38	677A51	Housing w/Silk Screening
39	71647	Housing Skid
40	74016	Skid Bar
41	51447	Screw, Machine 5/16 - 18 x 7/8
42	54922	Nut, Keps 5/16 - 18
43	71276	Housing Bracket - L.H.
44	71277	Housing Bracket - R.H.
45	71278	Channel
46	71298	Belt Keeper - L.H.
47	71299	Belt Keeper - R.H.
48	19P	*Bolt, Carriage 3/8 - 16 x 3/4
49	54005	Washer, .381 x .860 x .083
50	71285	Blade
51	67676	Screw, Hex Head 3/8 - 24 x 7/8 Gr. 5
52	67354	Washer, .390 x 2.38 x .156
53	677A52	Discharge Guard
54	71526	Discharge Spring
55	71555	Hinge Rod
56	71528	Bracket - Discharge Guard

*STANDARD HARDWARE–PURCHASE LOCALLY

REPAIR PARTS

36" RIDING LAWN TRACTOR–MODEL NUMBER L8218AR

STEERING AND WHEELS

KEY NO.	PART NO.	DESCRIPTION
1	74572	Steering Wheel Insert
2	506J	Steering Wheel
3	1000P	*Lockwasher 1/2
4	558P	*Nut, Hex Jam 1/2 - 20
5	74579	Steering Shaft
6	71210	Bushing
7	74580	Shaft Spacer
8	74581	Pinion Gear
9	69385	Washer, .630 x 1.50 x .127
10	52379	Spring Pin 3/16 x 1
11	74577	Steering Bracket
12	3010P	*Bolt, Hex Head 5/16 - 18 x 3/4
13	67818	Nut, Lock 5/16 - 18
14	71172	Gear
15	74578	Steering Rod -
16	71208	Bushing
17	52913	E-Ring 3/4 Shaft
18	53462	Washer, .656 x 1.250 x .093
19	72589	Spring
20	73446	Drive - Lock Pin
21	71219	Drag Link
22	7810H	Locknut, Hex 3/8 - 24
23	71185	Steering Arm Assembly
24	52079	Spring Pin 1/4 x 1 - 1/4
25	74255	Hub Cap
26	1591P	Washer, 25/32 x 1 - 1/4 x 21 Ga.
27	71653	Tire (18.00 - 9.50 x 8)
28	71652	Rim
29	65139	Valve Stem
30	59192	Valve Cap
31	66414	Square Key 3/16 x 2
32	794191	Transaxle Assembly Model 143.658 (See Pages 24 thru 25)
33	71267	Knob - Transmission
34	71179	Rocker Bar Assembly
35	64906	Bolt, Hex Head 1/2 - 13 x 3
36	59164	Washer, .515 x .875 x .063
37	60249	Nut, Lock 1/2 - 13
38	67151	Bushing
39	71188	Pivot Spacer
40	73236	Kingpin Assembly - L.H.
41	73237	Kingpin Assembly - R.H.
42	73240	Tie Rod
43	71182	Bearing Kingpin
44	3021P	*Bolt, Hex Head 3/8 - 16 x 3/4
45	3023P	*Bolt, Hex Head 3/8 - 16 x 1
46	67892	Nut, Lock 5/16 - 24
47	55611	Washer, .405 x .860 x .172
48	65543	Nut, Lock 3/8 - 16
49	71651	Tire (15 x 6.00 x 6)
50	625J	Bearing
51	620J	Rim (Inc. Ref. No. 50)
52	53632	Washer, .531 x 1.00 x .063

*STANDARD HARDWARE–PURCHASE LOCALLY

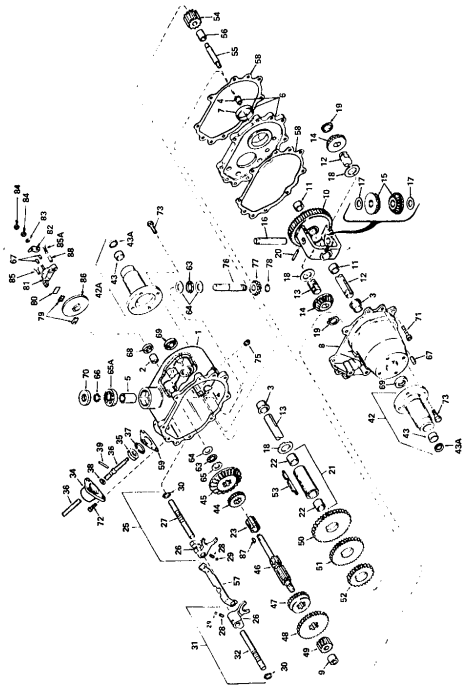

KEY NO.	PART NO.	DESCRIPTION
1	794191	Complete Transaxle
2	770053	Case Ass'y., Transaxle (Inc. No's. 2, 3 & 5)
3	780086	Bearing, Needle
4	780085	Bearing, Ball
5	780060	Bearing, Bronze
6	780065	Seal, Oil
7	786033	Plate Ass'y., Carrier (Inc. No's. 4 & 7)
8	780062	Bearing, Bronze
9	780063	Gear & Shaft Ass'y., Transaxle (Inc. No's. 3 & 9)
10	780053	Bearing, Needle
11	780064	Gear & Shaft Ass'y., Differential (Inc. No. 11)
12	780094	Axle, Left Hand
13	774221	Axle, Right Hand
14	778057	Gear, Bevel
15	778057	Gear, Bevel
16	786034	Pin, Drive
17	780065	Washer, Thrust
18	780066	Bearing, Thrust
19	780038	Ring, Snap
20	780050	Spacer, Axle
21	780036	Sleeve Ass'y., Countershaft (Inc. 2 of No. 22)
22	780066	Housing, Bronze
23	776066	Shaft, Idler
24	784079	Nut, Hex Jam, Slotted (1st & Rev.) (Inc. No. 24)
25	792003	Fork, Shift
26	792004	Rod, Shift
27	792014	Spring
28	784084	Ball, Steel
29	784085	Rod Ass'y., Countershaft
30	784088	Rod Ass'y., Shift (2nd & 3rd) (Inc. No's. 26, 30 & 32)
31	784089	Rod, Shift, Reverse
32	784095	Housing, Shift Lever
33	784098	Lever, Shift
34	784284	Lever, Brake
35	784116	Washer, Thrust
36	792001	Ring, Dowel
37	792049	Pin, Drive
38	792049A	Axle Ass'y., Axle (Inc. No's. 43 & 43A)
39	792043	Housing Ass'y., Axle (Inc. No's. 43 & 43A)
42	530105	Bearing, Needle

REPAIR PARTS
36" RIDING LAWN TRACTOR-MODEL NUMBER L8218AR
TRANSAXLE NO. 794191-MODEL NUMBER 143.658

KEY NO.	PART NO.	DESCRIPTION
43A	786242	Seal, Oil
45	778057	Gear, Bevel (33 Teeth)
46	778058	Gear, Bevel (9 Teeth)
47	778038	Gear, Shifting (1st & Rev.)
48	778059	Gear, Shifting (2nd & 3rd)
49	778060	Gear, Countershaft Drive (39 Teeth)
50	778061	Gear, Countershaft (35 Teeth)
51	778062	Gear, Countershaft (25 Teeth)
52	792034A	Key, Countershaft
53	778057	Shaft, Reverse Idler
54	778057	Shaft, Reverse Idler
55	784089	Spacer, Idler
56	788033	Gasket, Case & Cover
57	788030	Gasket, Shift Lever Housing
58	780071	Bearing, Thrust
59	780072	Washer, Thrust
60	780073	Washer, Thrust
63	780053	Bearing, Ball
64	780055	Bearing, Ball
65	786026	Pin, Dowel
65A	780063	Seal, Oil
66	786043	Seal, Oil
67	788035	Seal, Oil
68	786036	Pin, Transport Hex Nut 1/4 - 20 x 1 - 1/4
69	792007	Screw, Socket Hd. Cap 1/4 - 20 x 3/4
70	792039	Screw, Hex Hd. Sems 5/16 - 18 x 1
71	792039	Screw, Hex Hd.
72	776103	Shaft, Inbut
73	776103	Thrust Forming
74	788040	Ring, Pressure Forming
75	790003	Rod, Brake
76	790005	Pedal, Brake Pad
77	790007	Holder, Brake Pad
78	790004	Lever, Brake
79	792076	U-Clip, Brake
80	792075	Nut, Lock
81	792073	Screw, Hex Hd. Cap 1/4 - 20 x 1 - 1/4
84	792085	Screw, Hex Hd. Cap 1/4 - 20 x 2 - 1/4
85	790009	Disk, Brake
85A	790065	Pin, Woodruff No. 61
86	786066	Sticker

36" RIDING LAWN TRACTOR--MODEL NUMBER L8218AR
BRIGGS & STRATTON 8 H.P. ENGINE--MODEL NO. 191707, TYPE NO. 5627-01

CYLINDER, CRANKSHAFT AND ENGINE BASE GROUP

ALL ENGINE PARTS MUST BE PURCHASED THROUGH AND SERVICE PERFORMED BY YOUR LOCAL BRIGGS AND STRATTON DEALER.

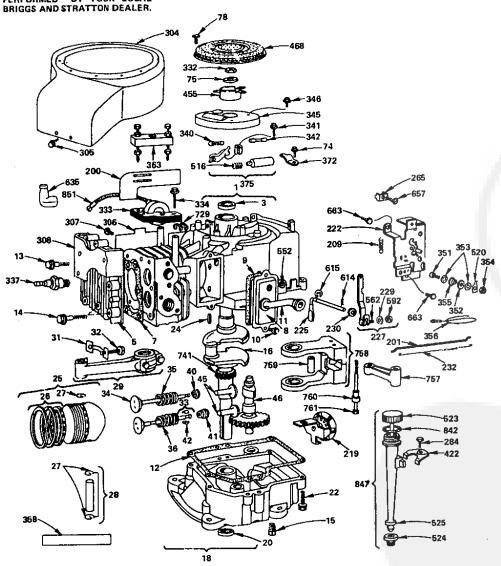

REPAIR PARTS

36" RIDING LAWN TRACTOR--MODEL NUMBER L8218AR
BRIGGS & STRATTON 8 H.P. ENGINE--MODEL NO. 191707, TYPE NO. 5627-01

KEY NO.	PART NO.	DESCRIPTION
1	392005	Cylinder Assembly (Inc. Key No. 3)
2	391726	Bushing - Cylinder
3	294606	Seal - Oil
5	212286	Head - Cylinder
7	270430	Gasket - Cylinder
8	391406	Breather Tube Assembly
9	27803	Gasket - Valve Cover
10	93304	Screw - Sem
11	280005	Tube - Breather
12	27750	*Gasket - Crankcase Cover - 1/64" Thick
12	27876	*Gasket - Crankcase Cover - .005" Thick
12	27877	*Gasket - Crankcase Cover - .009" Thick
13	93211	Screw - Cylinder Head (2 - 21/32" Long)
14	93723	Screw - Cylinder Head (3" Long)
15	91084	Plug, Oil Drain
16	391757	Crankshaft
18	398616	Sump - Oil (Inc. Key No's. 12 & 20)
20	298423	Seal - Oil
22	93585	Screw - Sump
24	61760	Key - Flywheel
26	391673	Piston Assy. - Std.
25	391674	Piston Assy. - .010" O.S.
25	391675	Piston Assy. - .020" O.S.
25	391676	Piston Assy. - .030" O.S.
26	391669	Ring Set - Piston - Std.
26	299743	Ring Set - Piston - Std. Chrome
26	391670	Ring Set - Piston - .010" O.S.
26	391671	Ring Set - Piston - .020" O.S.
26	391672	Ring Set - Piston - .030" O.S.
27	68546	Lock - Piston Pin
28	295840	Pin Assembly - Piston - Standard
28	295841	Pin Assembly - Piston - .005" O.S.
29	390402	Rod Assy. - Connecting
		NOTE: For Connecting Rod with .020" Undersize Crankpin Bore - Order No. 390773
31	222114	Lock - Connecting Rod Screw
32	92659	Screw - Connecting Rod
33	390419	Valve - Exhaust
34	261055	Valve - Intake
35	65906	Spring - Intake Valve
36	26828	Spring - Exhaust Valve
40	221596	Retainer - Intake Valve
41	292260	Rotocoil - Exhaust Valve
42	93830	Retainer - Exhaust Valve Rotocoil
45	260933	Tappet - Valve
46	211689	Gear - Cam
74	93042	Screw - Sems
75	220865	Washer - Spring
78	93808	Screw - Sem
200	221760	Guide - Air
201	260971	Link - Governor
209	261306	Spring - Governor
219	392718	Oil Slinger - Gov. Gear and Bracket Assembly
222	390662	Plate - Gov. Control
225	231058	Crank - Gov. (1/4" Dia.)
227	391733	Lever Assy. - Governor (For 1/4" Dia. Crank)
229	220680	Washer - Flat
230	222450	Washer - Gov. Lever (1/4" I.D.)
232	260584	Spring - Governor Link
265	221535	Clamp - Casing
284	93804	Screw - Clamp Mtg.
304	391379	Housing - Blower
305	93158	Screw - Blower Housing Mounting Sem
306	222830	Shield - Cylinder
307	93163	Screw, Cylinder Shield Mtg. Sem
308	222636	Cover, Cylinder Head
332	92284	Nut, Flywheel
333	298968	Armature Assembly
334	93381	Screw, Armature Mounting Sem
337	293918	Plug, Spark (1 - 1/2" High - 18 M.M. Resistor)
		NOTE: Ignition Cable Terminal No. 221798
340	26018	Spring - Breaker Arm
341	93381	Screw - Breaker Arm Mounting Sem
342	65704	Plunger - Breaker Point
345	222117	Cover - Breaker Point
346	93014	Screw - Sem
351	93735	Screw - Terminal
352	66068	Washer - Insulating
353	92791	Washer - Lock Shakeproof
354	90576	Nut - Hex 8 - 32
355	66554	Collar - Insulating
356	299500	Wire - Ground
358	299577	Gasket Set
363	19165	Puller - Flywheel
372	220477	Clamp - Condenser
375	294628	Breaker Points and Condenser Set
		NOTE: 299061 Ignition Kit includes 294628 Point Set, 65704 Plunger, 61760 Key - Flywheel
422	222502	Clamp - Oil Filler Tube
455	225951	Cup - Screen Mounting
468	222502	Screen - Flush Rotating
516	260374	Spring - Connector
520	93722	Terminal Spade
523	391840	Cap and Dipstick - Oil Filler
524	68838	Seal - Filler Tube
525	280133	Tube - Oil Filler
562	231055	Bushing - Gov. Crank (1/4" I.D.)
562	92613	Bolt - Governor Lever
592	231082	Nut, Hex 10 - 24
614	93306	Cotter - Hair Pin
615	93307	Retainer - E Ring
635	66538	Elbow - Spark Plug
657	93496	Screw - Sem
663	93572	Screw
729	221907	Clip - Wire
741	261195	Gear - Timing
757	211675	Link - Counterweight
758	390172	Counterweight Assy.
759	298909	Pin - Counterweight
760	230940	Spacer - Counterweight
761	93874	Screw - Counterweight
842	270920	Seal - Filler Cap
847	392066	Filler Group - Oil
851	221798	Terminal - Ignition Cable

*INCLUDED IN GASKET SET - PART NO. 299577

REPAIR PARTS

36" RIDING LAWN TRACTOR--MODEL NUMBER L8218AR
BRIGGS & STRATTON 8 H.P. ENGINE--MODEL NO. 191707, TYPE NO. 5627-01
AIR CLEANER, CARBURETOR AND FLYWHEEL GROUP

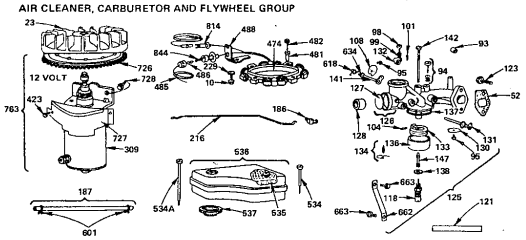

KEY NO.	PART NO.	DESCRIPTION
10	93394	Screw - Sem
23	391983	Flywheel and Ring Gear Ass'y. - Magneto
52	270824	Gasket - Carburetor Mounting
93	23108	Bushing - Throttle Shaft
94	292681	*Valve Assembly - Carburetor Idle
95	93499	Screw - Throttle and Choke Valve Mtg. Sem
98	91920	Screw - Machine Fill, Hd. 8 - 32 x 5/8"
99	26157	Spring - Throttle Adjustment
101	93043	Pin - Throttle Stop
104	230896	*Pin - Float Hinge
108	222010	Valve Choke
118	391233	*Valve Needle
121	299852	Carburetor Overhaul Kit
123	93357	Screw - Carburetor Mtg.
126	390811	Carburetor Assembly
126	299851	Body Assembly - Carburetor
127	221997	*Plug - Welch
128	211682	Venturi - Carburetor
130	221998	Valve - Throttle
131	391512	Shaft and Lever - Throttle
132	211712	Stop - Throttle
133	299707	Float - Carburetor
134	299096	*Valve - Fuel Inlet
136	221995	Bowl - Float
137	270511	*Gasket - Float Bowl
138	222014	*Washer - Float Bowl
141	390684	Shaft and Lever - Choke
142	299740	*Nozzle - Carburetor
147	230932	*Screw - Nozzle
186	67218	Connector - Fuel Pipe
187	296004	Pipe - Fuel
216	281117	Link Choke
229	220680	Washer, Flat
309	392749	Motor and Drive Ass'y. (See Breakdown of Parts Below)
423	93410	Screw - Sem
474	391532	Stator - Alternator
481	238970	Bushing - Stator
482	93621	Screw - Sem
485	390888	Knob Ass'y. - Fuse
486	391507	Diode - Alternator
488	222211	Bracket - Output
534	93622	Screw - Air Cleaner
534A	93323	Screw - Air Cleaner
535	270528	Element - Air Cleaner
538	391398	Cleaner Assembly - Air
		Uses 280111 Support - Air Cleaner Element (Plastic)
537	270539	Gasket - Air Cleaner
601	93053	Clamp - Fuel Pipe
618	261116	Spring - Choke Return
634	270382	Washer - Choke Shaft
662	222027	Bracket - Carburetor
663	93572	Screw
726	392134	Gear - Ring
727	390233	Cover and Shield - Starter
728	93523	Screw - Sem
763	391604	Electric Starter Kit - 12 Volt (Gear Drive)
814	390867	Wire - Assembly - 7 Amp. Alternator
844	261269	Spring - Diode

*Included in Carburetor Overhaul Kit - Part No. 299852

STARTER MOTOR GROUP

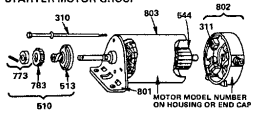

KEY NO.	PART NO.	DESCRIPTION
310	391706	Thru Bolt Ass'y.
311	391705	Brush Ass'y.
510	391461	**Drive Ass'y.
644	392747	Armature Ass'y.
801	391751	End Cap Ass'y. Drive
802	390846	*End Cap Ass'y. Commutator
803	392744	Housing Ass'y.

*Includes Brush Set
**Includes No. 391135 Clutch Ass'y. (Key No. 513)
No. 280104 Gear (Key No. 783)
No. 391462 Retainer and Pin (Key No. 773)

REPAIR PARTS

36" RIDING LAWN TRACTOR--MODEL NUMBER L8218AR
SCHEMATIC DIAGRAM

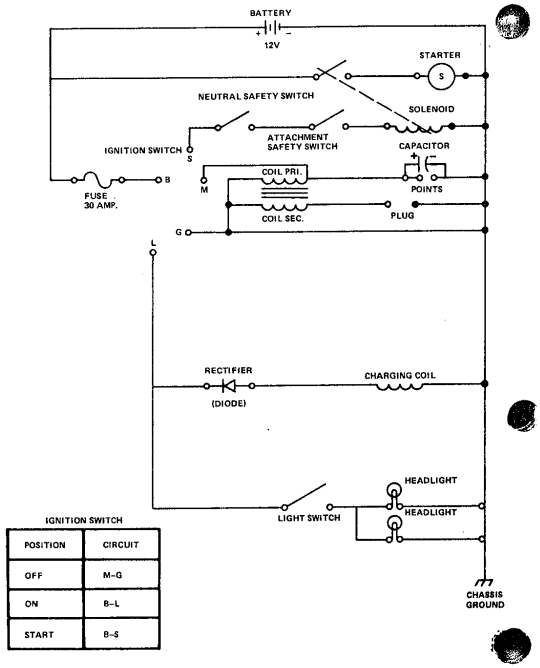

IGNITION SWITCH

POSITION	CIRCUIT
OFF	M–G
ON	B–L
START	B–S

REPAIR PARTS

36" RIDING LAWN TRACTOR--MODEL NUMBER L8218BR
ELECTRIC & ENGINE

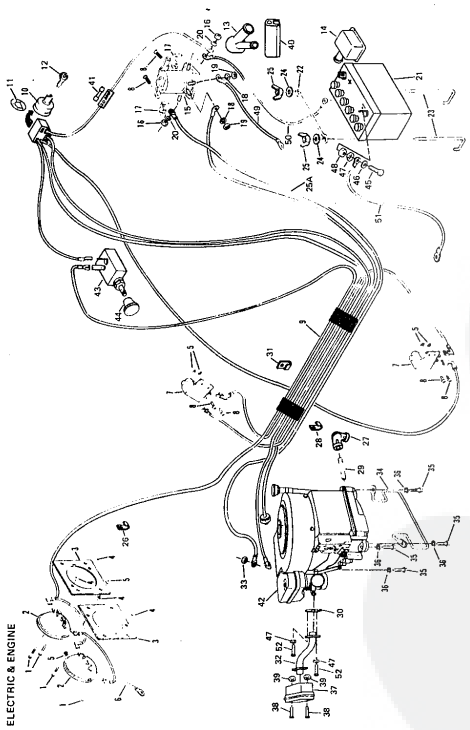

KEY NO.	PART NO.	DESCRIPTION
1	66421	Screw, Machine Truss Head No. 10 - 24 x 1
2	64528R	Headlight
3	73025	Headlight Support
4	53951	Nut, Lock No. 10 - 24
5	561P	Nut, Kep's No. 10 - 24
6	71709	Wire Assembly
7	71556	Guard - Fan
8	3359P	Screw, Machine Phillips Head No. 10 - 24 x 1/2
9	478J	Wire Harness
10	44065R	Ignition Switch (Inc. Ref No. 12)
11	8657R	Terminal Identifier
12	7552M	Key Set
13	512J	Terminal Cover (Dual)
14	225J	Terminal Cover
15	6354R	Solenoid
16	539P	*Screw, Jam 5/16 - 24
17	60891	Nut, Speed No. 10 - 24
18	6459P	*Washer, Lock No. 10
19	6439P	*Washer, Flat No. 10
20	1003P	*Lockwasher 5/16
21	6218J	Battery
22	6218Z	Battery Rod
23	70456	Battery Bolt
24	7556J	Battery Clamp
25	52231	Washer, .265 x .750 x .063
25A	599J	Wire - Solenoid to Starter
26	2521R	Insulated Clip
27	4017P	Std. Elbow 90° 3/8 - 18 NPT
28	73070	Insulated Clip
29	73458	Nipple
30	72144	Exhaust Gasket
31	67341R	Insulated Clip
32	5771J	Muffler
33	53490	Nut, Lock 1/4 - 20
34	75082	Bolt Keeper
35	7508P	Screw, Machine Hd. Thd. Rolling 3/8 - 16 x 1 - 1/2
36	1004P	*Washer, Lock 3/8
37	7441S	Nut, Hex
38	3271P	Hex Bolt 5/16 - 18 x 2 - 3/4
39	84922	Nut, Kep's 5/16 - 18
40	8211J	Solenoid Bracket
41	6347R	Fuse - 30 Amp.
42	191707	Engine - Briggs and Stratton 8 H.P. **Type No. 5627-01 (See pages 28 thru 29)
43	7793R	Light Switch
44	7754R	Knob, Light Switch
45	7601S	*Screw, Hex Hd. 1/4 - 20 x 3/4
46	1506P	*Washer 9/32 x .578 x 16 Ga.
47	1002P	*Lockwasher 1/4
48	1538P	*Nut, Hex 1/4 - 20
49	8027R	Wire - Ground Solenoid
50	597J	Battery Cable
51	8028J	Ground Cable
52	70541	Screw, Hex Hd. 1/4 - 20 x .62
...	1174J	Owners Manual

*STANDARD HARDWARE - PURCHASE LOCALLY

REPAIR PARTS

36" RIDING LAWN TRACTOR--MODEL NUMBER L8218BR
ELECTRIC & ENGINE

KEY NO.	PART NO.	DESCRIPTION
1	66421	Screw, Machine Truss Head No. 10 - 24 x 1
2	64528R	Headlight
3	73025	Headlight Support
4	53951	Nut, Lock No. 10 - 24
5	561P	Nut, Kep's No. 10 - 24
6	71709	Wire Assembly
7	71556	Guard - Fan
8	3359P	Screw, Machine Phillips Head No. 10 - 24 x 1/2
9	478J	Wire Harness
10	44065R	Ignition Switch (Inc. Ref No. 12)
11	8657R	Terminal Identifier
12	7552M	Key Set
13	512J	Terminal Cover (Dual)
14	225J	Terminal Cover
15	6354R	Solenoid
16	539P	*Screw, Jam 5/16 - 24
17	60891	Nut, Speed No. 10 - 24
18	6459P	*Washer, Lock No. 10
19	6439P	*Washer, Flat No. 10
20	1003P	*Lockwasher 5/16
21	6218J	Battery
22	6218Z	Battery Rod
23	70456	Battery Bolt
24	7556J	Battery Clamp
25	52231	Washer, .265 x .750 x .063
25A	599J	Wire - Solenoid to Starter
26	2521R	Insulated Clip
27	4017P	Std. Elbow 90° 3/8 - 18 NPT
28	73070	Insulated Clip
29	73458	Nipple
30	72144	Exhaust Gasket
31	67341R	Insulated Clip
32	5771J	Muffler
33	53490	Nut, Lock 1/4 - 20
34	75082	Bolt Keeper
35	7508P	Screw, Machine Hd. Thd. Rolling 3/8 - 16 x 1 - 1/2
36	1004P	*Washer, Lock 3/8
37	7441S	Nut, Hex
38	3271P	Hex Bolt 5/16 - 18 x 2 - 3/4
39	84922	Nut, Kep's 5/16 - 18
40	8211J	Solenoid Bracket
41	6347R	Fuse - 30 Amp.
42	191707	Engine - Briggs and Stratton 8 H.P. **Type No. 5627-01 (See pages 28 thru 29)
43	7793R	Light Switch
44	7754R	Knob, Light Switch
45	7601S	*Screw, Hex Hd. 1/4 - 20 x 3/4
46	1506P	*Washer 9/32 x .578 x 16 Ga.
47	1002P	*Lockwasher 1/4
48	1538P	*Nut, Hex 1/4 - 20
49	8027R	Wire - Ground Solenoid
50	597J	Battery Cable
51	8028J	Ground Cable
52	70541	Screw, Hex Hd. 1/4 - 20 x .62
...	1174J	Owners Manual

*STANDARD HARDWARE - PURCHASE LOCALLY

REPAIR PARTS

36" RIDING LAWN TRACTOR–MODEL NUMBER L8218BR

CLUTCH-BRAKE & DRIVE

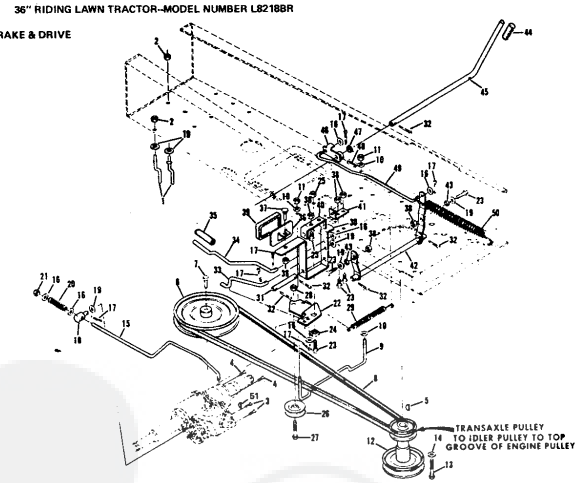

REPAIR PARTS

36" RIDING LAWN TRACTOR–MODEL NUMBER L8218BR

CLUTCH-BRAKE & DRIVE

KEY NO.	PART NO.	DESCRIPTION
1	71200	Belt Guide
2	54922	Nut, Keps 5/16 - 18
3	68205	Screw, Hex Head w/Washer 5/16 - 18 x 7/8
4	68206	Screw, Hex Head w/Washer 5/16 - 18 x 1 - 1/8
5	65053	Key, Woodruff No. 6
6	73542	Pulley - Transaxle
7	6058P	Screw, Machine w/Washer 1/4 - 20 x 3/4 Gr. 5
8	73794	Belt
9	71241	Mid Belt Guide
10	51785	Washer, .400 x .875 x .063
11	56615	Nut, Lock 3/8 - 16
12	71923	Pulley - Engine
13	68874	Screw, Machine w/Washer Nylon 3/8 - 24 x 1 - 3/8
14	62735	Washer, .375 x 1.250 x .201
15	73792	Brake Rod
16	53998	Washer, .406 x .750 x .063
17	2603P	*Cotter Pin 3/32 x 3/4
18	71238	Trunion
19	50806	Washer, .328 x .750 x .063
20	71239	Brake Spring
21	62336	Nut, Lock 3/8 - 16
22	71201	Idler Bracket
23	3010P	*Bolt, Hex Head 5/16 - 18 x 3/4
24	71202	Bushing
25	63124	Nut, Lock 5/16 - 18
26	67400	Pulley - Idler
27	3027P	*Bolt, Hex Head 3/8 - 16 x 1 - 1/2
28	65543	Nut, Lock 3/8 - 16
29	383J	Spring - Idler
30	390J	Foot Pedal
31	71223	Pedal Shaft
32	2506P	*Cotter Pin 1/8 x 1
33	74419	Clutch Rod
34	373J	Park Brake Rod
35	71226	Grip
36	71222	Pedal Plate
37	16P	*Bolt, Carriage 5/16 - 18 x 3/4
38	67818	Nut, Lock 5/16 - 18
39	67365	Foot Pad
40	71199	Pedal Bracket
41	71204	Switch Bracket
42	71191	Clutch Arm Assembly
43	71195	Spacer
44	71246	Grip
45	71242	Clutch Lever
46	73229	Clutch Arm Assembly
47	53632	Washer, .531 x 1 x .063
48	52379	Spring Pin 3/16 x 1
49	74474	Blade Clutch Rod
50	71248	Spring
51	52859	Key, Woodruff No. 61

*STANDARD HARDWARE-PURCHASE LOCALLY

REPAIR PARTS

36" RIDING LAWN TRACTOR–MODEL NUMBER L8218BR

CHASSIS

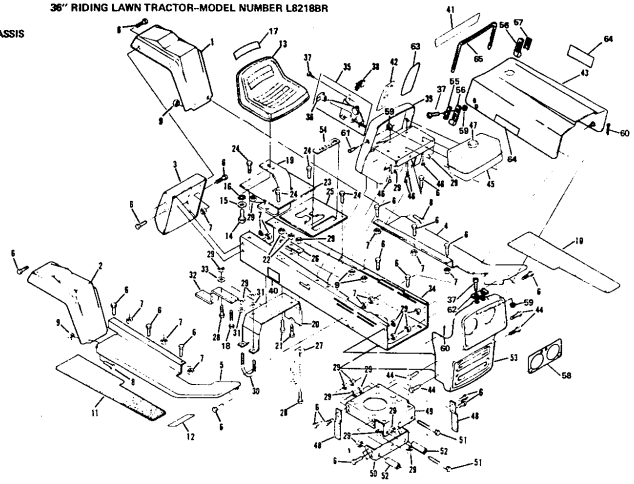

REPAIR PARTS

36" RIDING LAWN TRACTOR–MODEL NUMBER L8218BR

CHASSIS

KEY NO.	PART NO.	DESCRIPTION
1	388J	Fender - L.H.
2	389J	Fender - R.H.
3	677A15	Rear Cover Ass'y.
4	386J	Foot Rest - L.H.
5	387J	Foot Rest - R.H.
6	3010P	*Bolt, Hex Head 5/16 - 18 x 3/4
7	67818	Nut, Lock 5/16 - 18
8	54262	Screw, Hex Head w/Washer 5/16 - 18 x 5/8
9	65221	Nut, Lock 5/16 - 18
10	73302	Foot Rest Pad, L.H.
11	73303	Foot Rest Pad, R.H.
12	376J	Decal - Clutch and Brake
13	1496J	Seat
14	3042P	*Bolt, Hex Head 1/2 - 13 x 1
15	53084	Washer, .531 x 1.187 x .127
16	1000P	*Washer, Lock 1/2
17	245J	Decal - Seat
18	52404	Bolt, Hex Head 5/16 - 18 x 1 - 1/4
19	73790	Seat Spring
20	73791	Transaxle Support
21	3023P	*Bolt, Hex Head 3/8 - 16 x 1
22	65543	Nut, Lock 3/8 - 16
23	393J	Cover Plate
24	71263	Screw, Hex Hd. Thd. Cutting 5/16 - 18 x 1/2
25	677A53	Chassis Cover
26	71507	Support
27	71198	Axle Strap
28	3011P	*Bolt, Hex Head 5/16 - 18 x 1
29	67818	Nut, Lock 5/16 - 18
30	71606	Clamp
31	56944	Washer, .312 x .750 x .127
32	71205	Tow Hitch
33	62735	Washer, .375 x 1.250 x .201
34	73789	Chassis
35	74666	Throttle Control Lever (Inc. Key No. 36)
36	61159	Knob - Throttle Control
37	6005P	*Screw, Machine No. 10 - 24 x 1 2
38	60891	Nut, Speed No. 10 - 24
39	677A13	Dash Weldment
40	75078	Decal - 8"
41	655J	Decal - Dash Instructions
42	482J	Decal - Dash Controls
43	677A12	Hood Weldment
44	71969	Screw, Hex Washer Hd. 5/16 - 18 x 3/4
45	73427	Fuel Tank
46	68346	Screw, Thd. Cutting 1/4 - 20 x 3/4
47	74145	Fuel Cap
48	71190	Brake Rod Bracket
49	71177	Engine Base
50	71178	Rocker Bar Support
51	3271P	*Bolt, Hex Head 5/16 - 18 x 2 - 3/4
52	71431	Bushing
53	374J	Grill Frame
54	74307	Battery Cap
55	8935R	Hood Latch Cover - R.H.
56	8889R	Hood Latch
57	9015R	Hood Latch Cover - L.H.
58	602J	Decal - Headlight
59	4632H	Locknut No. 10 - 24
60	2503P	*Cotter Pin 3 32 x 3 4
61	8753R	Hood Latch Pin
62	470J	Hood Bumper
63	481J	Decal - Dash - L.H.
64	242J	Decal, Hood Sides
65	892J	Hood Strip
---	941J	Warranty Tag

*STANDARD HARDWARE-PURCHASE LOCALLY

REPAIR PARTS

36" RIDING LAWN TRACTOR--MODEL NUMBER L8218BR

MOWER

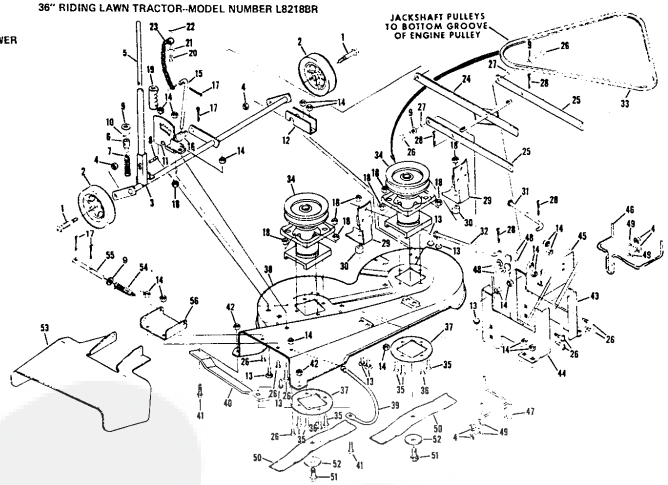

REPAIR PARTS

36" RIDING LAWN TRACTOR--MODEL NUMBER L8218BR

STEERING & WHEELS

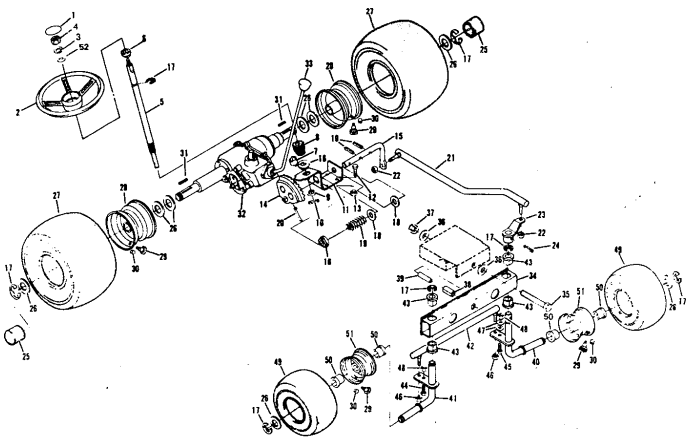

REPAIR PARTS

36" RIDING LAWN TRACTOR--MODEL NUMBER L8218BR

MOWER

KEY NO.	PART NO.	DESCRIPTION
1	60838	Axle Bolt
2	63655	Gauge Wheel
3	71671	Pivot Rod Assembly
4	65543	Nut, Lock 3/8 - 16
5	73963	Rod
6	71658	Plunger
7	71669	Spring
8	54960	Spring Pin – Slotted 1/4 x 1 - 1/2
9	50806	Washer, .328 x .750 x .063
10	52870	Spring Pin 1/8 x 5/8
11	72937	Quadrant Assembly
12	67337	Pivot Rod Support
13	15P	Bolt, Carriage 5/16 - 18 x 5/8
14	67818	Nut, Lock 5/16 - 18
15	71300	Adjustment Rod
16	71301	Trunion
17	2503P	*Cotter Pin 3/32 x 3/4
18	62336	Nut, Lock 3/8 - 16
19	71672	Grip
20	3275P	Phillips Pan Hd. Machine Screw 1/4 - 20 x 1
21	65329	Washer, .266 x 1 x .063
22	53490	Nut, Lock 1/4 - 20
23	74014	Sway Chain
24	72915	Parallel Rod Assembly
25	71297	Parallel Link
26	3010P	*Bolt, Hex Head 5/16 - 18 x 3/4
27	71616	Spacer
28	2506P	*Cotter Pin 1/8 x 1
29	73559	Brake Spring Assembly
30	71522	Spacer, Brake Spring
31	71525	Brake Rod - L.H.
32	71524	Brake Rod - R.H.
33	62828	Belt
34	677A14	Jackshaft Assembly
35	3023P	*Bolt, Hex Head 3/8 - 16 x 1
36	3027P	*Bolt, Hex Head 3/8 - 16 x 1 - 1/2
37	71575	Plate
38	677A51	Housing w/Silk Screening
39	71647	Housing Skid
40	74016	Skid Bar
41	51447	Screw, Machine 5/16 - 18 x 7/8
42	54922	Nut, Keps 5/16 - 18
43	71276	Housing Bracket - L.H.
44	71277	Housing Bracket - R.H.
45	71278	Channel
46	71298	Belt Keeper - L.H.
47	71299	Belt Keeper - R.H.
48	19P	*Bolt, Carriage 3/8 - 16 x 3/4
49	54005	Washer, .381 x .860 x .083
50	71285	Blade
51	67676	Screw, Hex Head 3/8 - 24 x 7/8 Gr. 5
52	67354	Washer, .390 x 2.38 x .156
53	677A52	Discharge Guard
54	71526	Discharge Spring
55	71555	Hinge Rod
56	71528	Bracket - Discharge Guard

*STANDARD HARDWARE-PURCHASE LOCALLY

REPAIR PARTS

36" RIDING LAWN TRACTOR--MODEL NUMBER L8218BR

STEERING AND WHEELS

KEY NO.	PART NO.	DESCRIPTION
1	1114J	Steering Wheel Insert
2	506J	Steering Wheel
3	1000P	*Lockwasher 1/2
4	558P	*Nut, Hex Jam 1/2 - 20
5	74579	Steering Shaft
6	71210	Bushing
7	74580	Shaft Spacer
8	74581	Pinion Gear
9	69385	Washer, .630 x 1.50 x .127
10	52379	Spring Pin 3/16 x 1
11	74577	Steering Bracket
12	3010P	*Bolt, Hex Head 5/16 - 18 x 3/4
13	67818	Nut, Lock 5/16 - 18
14	71172	Gear
15	74578	Steering Rod
16	71208	Bushing
17	52913	E-Ring 3/4 Shaft
18	53462	Washer, .656 x 1.250 x .093
19	72589	Spring
20	73446	Drive - Lock Pin
21	71219	Drag Link
22	7810H	Locknut, Hex 3/8 - 24
23	71185	Steering Arm Assembly
24	62079	Spring Pin 1/4 x 1 - 1/4
25	74255	Hub Cap
26	1501P	Washer, 25/32 x 1 - 1/4 x 21 Ga.
27	71653	Tire (18.00 - 9.50 x 8)
28	71652	Rim
29	65139	Valve Stem
30	59192	Valve Cap
31	66414	Square Key 3/16 x 2
32	794191A	Transaxle Assembly Model 143.658A (See Pages 24 thru 25)
33	71267	Knob - Transmission
34	71179	Rocker Bar Assembly
35	64608	Bolt, Hex Head 1/2 - 13 x 3
36	59164	Washer, .515 x .875 x .063
37	60249	Nut, Lock 1/2 - 13
38	67151	Bushing
39	71188	Pivot Spacer
40	73236	Kingpin Assembly - L.H.
41	73237	Kingpin Assembly - R.H.
42	73240	Tie Rod
43	71182	Bearing Kingpin
44	3021P	*Bolt, Hex Head 3/8 - 16 x 3/4
45	3023P	*Bolt, Hex Head 3/8 - 16 x 1
46	67892	Nut, Lock 5/16 - 24
47	55611	Washer, .405 x .860 x .172
48	65543	Nut, Lock 3/8 - 16
49	71651	Tire (15 x 6.00 x 6)
50	625J	Bearing
51	620J	Rim (Inc. Ref. No. 50)
52	53632	Washer, .531 x 1.00 x .063

*STANDARD HARDWARE-PURCHASE LOCALLY

REPAIR PARTS

36" RIDING LAWN TRACTOR-MODEL NUMBER L8218BR
TRANSAXLE NO. 794191A-MODEL NUMBER 143.658A

ALL TRANSAXLE PARTS MUST BE PURCHASED THROUGH AND SERVICE PERFORMED BY YOUR LOCAL TECUMSEH DEALER

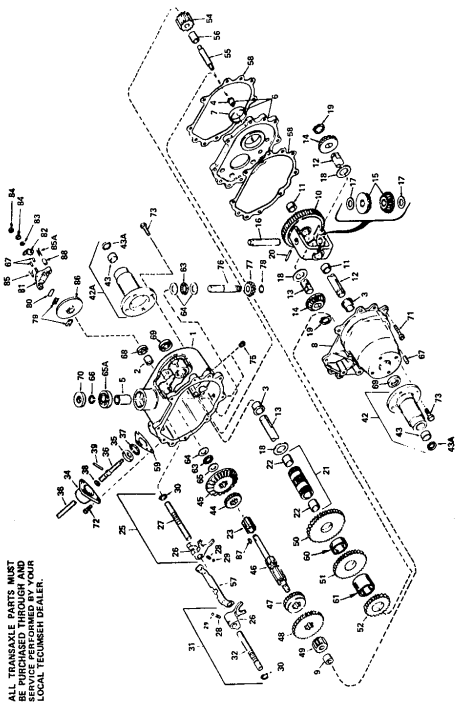

REPAIR PARTS

36" RIDING LAWN TRACTOR-MODEL NUMBER L8218BR
TRANSAXLE NO. 794191A-MODEL NUMBER 143.658A

KEY NO.	PART NO.	DESCRIPTION
1	794191A	Complete Transaxle
2	790088	Base Asy. Transaxle (Inc. No's. 2, 3 & 5)
3	790089	Bearing, Bronze
4	790090	Bearing, Bronze
5	790091	Bearing, Bronze
6	790092	Planet Asy. Gear Center (Inc. No's. 4 & 7)
7	772042	Cover Asy., Transaxle (Inc. No's. 3 & 8)
8	790093	Bearing, Bronze
9	790094	Gear Asy., Differential (Inc. No. 11)
10	778053	Axle, Left Hand
11	774220	Axle, Right Hand
12	778068	Pinion, Bevel
13	778054	Pin, Drive
14	790095	Washer, Thrust
15	790096	Washer, Thrust
16	790097	Pin, Roll
17	790098	Pin, Roll
18	790040	Sleeve Asy., Countershaft
19	790099	Base Asy. Cover
20	790100	Bearing, Bronze
21	790101	Seal, Oil
22	790102	Gear, Spur
23	790103	Rod Asy., Shift (1st & Rev.) (Inc. No's. 25 (Inc. No. 30)
24	790104	Fork, Shift
25	790105	Rod, Shift
26	790106	Ball, Steel
27	790107	Ring, Snap
28	790108	Shift Asy., Shift (2nd & 3rd) (Inc. No's. 26, 29, 30, 35 & 37)
29	790109	Rod, Shift
30	790110	Shift Lever, Shift
31	790111	Keeper, Shift Lever
32	790112	Ring, Snap
34	790113	Pin, Dowel
35	790114	Ball, Steel
36	790115	Ring, Snap
37	790116	Rod, Shift
38	790117	Fork, Shift
39	790118	Pin, Dowel
42	790119	Housing Asy., Axle (Inc. No's. 43 & 43A)
42A	790120	Housing Asy., Axle (Inc. No's. 43 & 43A)
43	530105	Bearing, Needle
43A	778024	Gear (18 Teeth)

KEY NO.	PART NO.	DESCRIPTION
45	778057	Gear, Bevel (33 Teeth)
46	778058	Shaft, Shifter & Brake
47	778059	Gear, Shift (Inc. 3rd)
48	778069	Gear, Shift (1st & Rev.)
49	778060	Gear, Pinion (13 Teeth)
50	778140	Gear, Countershaft Drive (39 Teeth)
51	778141	Gear, Countershaft (24 Teeth)
52	778142	Gear, Countershaft (42 Teeth)
53	778064	Gear, Reverse Idler
54	778037	Gear, Countershaft (28 Teeth)
55	778065	Stator, Reverse Idler
56	778036	Stop, Shifter
57	778067	Cover Asy., Brake & Cover
58	778003	Gasket, Shift Lever Housing
59	778070	Spacer
60	778078	Spacer
61	778071	Bearing, Thrust
62	778072	Washer, Thrust
63	778073	Washer, Thrust
64	778074	Pin, Roll
65	792035	Rivet, Brake
65A	792036	Pin, Dowel
66	778075	Seal, Oil
67	778076	Seal, Oil
68	778009	Screw, Flanged Hex Hd. 1/4 - 20 x 1 - 1/4
69	792037	Screw, Socket Hd. Cap 1/4 - 20 x 3/4
70	792038	Screw, Set, Cup Point 5/16 - 18 x 1
71	792039	Plug, Pipe 1/8
72	778077	Shaft, Input
73	778013	Pin, Roll
74	778040	Ring, Retaining
75	778079	Retainer, Thrust
76	790007	Plate, Brake
77	790008	Pad, Brake
78	790005	Holder, Brake Pad
79	790006	Plate, Brake
80	790007	Plate, Brake Pad
81	790010	Holder, Brake Pad
82	790011	Lever, Brake
83	792076	Washer, Flat
84	792077	Nut, Hex Jam
85	792073	Screw, Hex. Hd. Cap, 1/4 - 20 x 1 - 1/4
85A	792085	Thrd. Forming Screw, Hex Hd. Cap 1/4 - 20 x 2 - 1/4
86	790009	Thrd. Forming
87	790045	Screw, Hex Head
88	778066	Key, Woodruff No. 61
		Spacer

REPAIR PARTS

36" RIDING LAWN TRACTOR--MODEL NUMBER L8218BR
BRIGGS & STRATTON 8 H.P. ENGINE--MODEL NO. 191707, TYPE NO. 5627-01

CYLINDER, CRANKSHAFT AND ENGINE BASE GROUP

ALL ENGINE PARTS MUST BE PURCHASED THROUGH AND SERVICE PERFORMED BY YOUR LOCAL BRIGGS AND STRATTON DEALER.

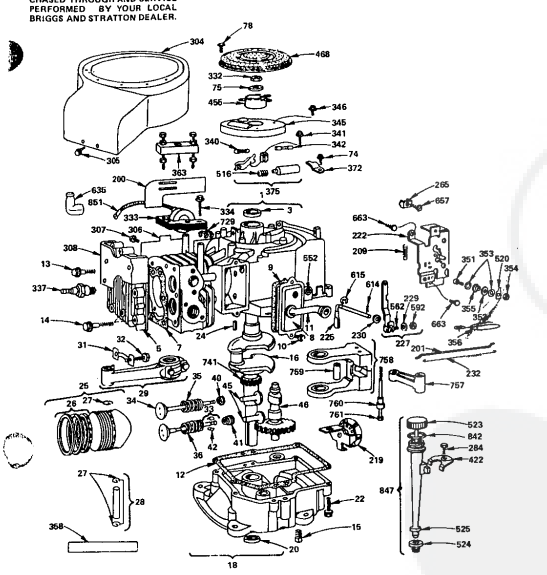

REPAIR PARTS

36" RIDING LAWN TRACTOR--MODEL NUMBER L8218BR
BRIGGS & STRATTON 8 H.P. ENGINE--MODEL NO. 191707, TYPE NO. 5627-01

KEY NO.	PART NO.	DESCRIPTION
1	392005	Cylinder Assembly (Inc. Key No. 3)
2	391726	Bushing - Cylinder
3	294606	Seal - Oil
5	212286	Head - Cylinder
7	270430	Gasket - Cylinder
8	391406	Breather Tube Assembly
9	27803	Gasket - Valve Cover
10	93394	Screw - Sem
11	280005	Tube - Breather
12	27750	*Gasket - Crankcase Cover - 1/64" Thick
12	27876	*Gasket - Crankcase Cover - .005" Thick
12	27877	*Gasket - Crankcase Cover - .009" Thick
13	93211	Screw - Cylinder Head (2 - 21/32" Long)
14	93723	Screw - Cylinder Head (3" Long)
15	91084	Plug, Oil Drain
16	391757	Crankshaft
18	298616	Sump - Oil (Inc. Key No's. 12 & 20)
20	298423	Seal - Oil
22	93585	Screw - Sump
24	61760	Key - Flywheel
25	391673	Piston Assy. - Std.
25	391674	Piston Assy. - .010" O.S.
25	391675	Piston Assy. - .020" O.S.
25	391676	Piston Assy. - .030" O.S.
26	391669	Ring Set - Piston - Std.
26	299743	Ring Set - Piston - Std. Chrome
26	391670	Ring Set - Piston - .010" O.S.
26	391671	Ring Set - Piston - .020" O.S.
26	391672	Ring Set - Piston - .030" O.S.
27	68546	Lock - Piston Pin
28	295840	Pin Assembly - Piston - Standard
28	295841	Pin Assembly - Piston - .005" O.S.
29	390402	Rod Assy. - Connecting
		NOTE: For Connecting Rod with .020" Undersize Crankpin Bore - Order No. 390773
31	222114	Lock - Connecting Rod Screw
32	92659	Screw - Connecting Rod
33	390419	Valve - Exhaust
34	261055	Valve - Intake
35	65906	Spring - Intake Valve
36	26828	Spring - Exhaust Valve
40	221596	Retainer - Intake Valve
41	292260	Rotocoil - Exhaust Valve
42	93630	Retainer - Exhaust Valve Rotocoil
45	260933	Tappet - Valve
46	211689	Gear - Cam
74	93042	Screw - Sems
75	220865	Washer - Spring
78	93808	Screw - Sem
200	221760	Guide - Air
201	260971	Link - Governor
209	261306	Spring - Governor
219	392718	Oil Slinger - Gov. Gear and Bracket Assembly
222	390662	Plate - Gov. Control
225	231058	Crank - Gov. (1/4" Dia.)
227	391733	Lever Assy. - Governor (For 1/4" Dia. Crank)
229	220680	Washer - Flat
230	222450	Washer - Gov. Lever (1/4" I.D.)
232	260584	Spring - Governor Link
265	221535	Clamp - Casing
284	93804	Screw - Clamp Mtg.
304	391379	Housing - Blower
305	93158	Screw - Blower Housing Mounting Sem
306	222830	Shield - Cylinder
307	93163	Screw, Cylinder Shield Mtg. Sem
308	222636	Cover, Cylinder Head
332	92284	Nut, Flywheel
333	298968	Armature Assembly
334	93381	Screw, Armature Mounting Sem
337	293918	Plug, Spark (1 - 1/2" High - 38 M.M. Resistor)
		NOTE: Ignition Cable Terminal No. 221798
340	26018	Spring - Breaker Arm
341	93381	Screw - Breaker Arm Mounting Sem
342	65704	Plunger - Breaker Point
345	222117	Cover - Breaker Point
346	93014	Screw - Sem
351	93735	Screw - Terminal
352	66068	Washer - Insulating
353	92791	Washer - Lock Shakeproof
354	90576	Nut - Hex 8 - 32
355	66554	Collar - Insulating
356	299500	Wire - Ground
358	299577	Gasket Set
363	19165	Puller - Flywheel
372	220477	Clamp - Condenser
375	294628	Breaker Points and Condenser Set
		NOTE: 299061 Ignition Kit Includes 294628 Point Set, 65704 Plunger, 61760 Key - Flywheel
422	222502	Clamp - Oil Filler Tube
455	222561	Cup - Screen Mounting
468	222562	Screen - Flush Rotating
516	260374	Spring - Connector
520	93722	Terminal Spade
523	391840	Cap and Dipstick - Oil Filler
524	68838	Seal - Filler Tube
525	280133	Tube - Oil Filler
552	231056	Bushing - Gov. Crank (1/4" I.D.)
562	92613	Bolt - Governor Lever
592	231082	Nut, Hex 10 - 24
614	93306	Cotter - Hair Pin
615	93307	Retainer - E-Ring
635	66538	Elbow - Spark Plug
657	93496	Screw - Sem
663	93572	Screw
729	221907	Clip - Wire
741	261195	Gear - Timing
757	211675	Link - Counterweight
758	390172	Counterweight Assy.
759	298909	Pin - Counterweight
760	230940	Spacer - Counterweight
761	93874	Screw - Counterweight
842	270920	Seal - Filler Cap
847	392066	Filler Group - Oil
851	221798	Terminal - Ignition Cable

*INCLUDED IN GASKET SET - PART NO. 299577

REPAIR PARTS

36" RIDING LAWN TRACTOR-MODEL NUMBER L8218BR
BRIGGS & STRATTON 8 H.P. ENGINE-MODEL NO. 191707, TYPE NO. 5627-01

AIR CLEANER, CARBURETOR AND FLYWHEEL GROUP

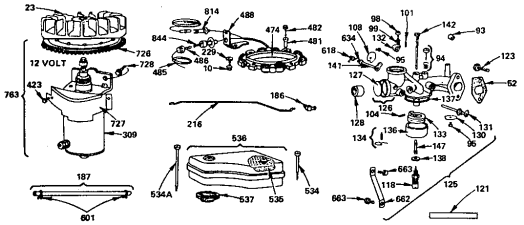

KEY NO.	PART NO.	DESCRIPTION
10	93394	Screw - Sem
23	391983	Flywheel and Ring Gear Ass'y. - Magneto
52	270824	Gasket - Carburetor Mounting
93	23108	Bushing - Throttle Shaft
94	292681	*Valve Assembly - Carburetor Idle
95	93499	Screw - Throttle and Choke Valve Mtg. Sem
98	91920	Screw - Machine Fill. Hd. 8 - 32 x 5/8"
99	26157	Spring - Throttle Adjustment
101	93043	Pin - Throttle Stop
104	230896	*Pin - Float Hinge
108	222010	Valve Choke
118	391233	*Valve Needle
121	299852	Carburetor Overhaul Kit
123	93357	Screw - Carburetor Mtg.
125	390811	Carburetor Assembly
126	299851	Body Assembly - Carburetor
127	221997	*Plug - Welch
128	211682	Venturi - Carburetor
130	221986	Valve - Throttle
131	391512	Shaft and Lever - Throttle
132	211712	Stop - Throttle
133	299707	Float - Carburetor
134	299096	*Valve - Fuel Inlet
136	221996	Bowl - Float
137	270511	*Gasket - Float Bowl
138	222014	*Washer - Float Bowl
141	390684	Shaft and Lever - Choke
142	299740	*Nozzle - Carburetor
147	230832	*Screw - Nozzle
186	67218	Connector - Fuel Pipe
187	298004	Pipe - Fuel
216	261117	Link Choke
229	220680	Washer, Flat
309	392749	Motor and Drive Ass'y. (See Breakdown of Parts Below)
423	93410	Screw - Sem
474	391532	Stator - Alternator
481	238970	Bushing - Stator
482	93621	Screw - Sem
485	390888	Knob Ass'y. - Fuse
486	391507	Diode - Alternator
488	222211	Bracket - Output
534	93622	Screw - Air Cleaner
534A	93323	Screw - Air Cleaner
535	270528	Element - Air Cleaner
536	391399	Cleaner Assembly - Air
	Uses 280111	Support - Air Cleaner Element (Plastic)
537	270539	Gasket - Air Cleaner
601	93053	Clamp - Fuel Pipe
618	261116	Spring - Choke Return
634	270382	Washer - Choke Shaft
662	222027	Bracket - Carburetor
663	93572	Screw
726	392134	Gear - Ring
727	390233	Cover and Shield - Starter
728	93523	Screw - Sem
783	391604	Electric Starter Kit - 12 Volt (Gear Drive)
814	390867	Wire - Assembly - 7 Amp. Alternator
844	261269	Spring - Diode

*Included in Carburetor Overhaul Kit - Part No. 299852

STARTER MOTOR GROUP

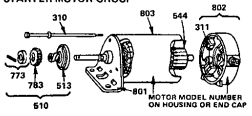

KEY NO.	PART NO.	DESCRIPTION
310	391706	Thru Bolt Ass'y.
311	391705	Brush Ass'y.
510	391461	**Drive Ass'y.
544	392747	Armature Ass'y.
801	391751	End Cap Ass'y. Drive
802	390846	*End Cap Ass'y. Commutator
803	392744	Housing Ass'y.

*Includes Brush Set
**Includes No. 391135 Clutch Ass'y. (Key No. 513)
No. 280104 Gear (Key No. 783)
No. 391462 Retainer and Pin (Key No. 773)

REPAIR PARTS

36" RIDING LAWN TRACTOR-MODEL NUMBER L8218BR

SCHEMATIC DIAGRAM

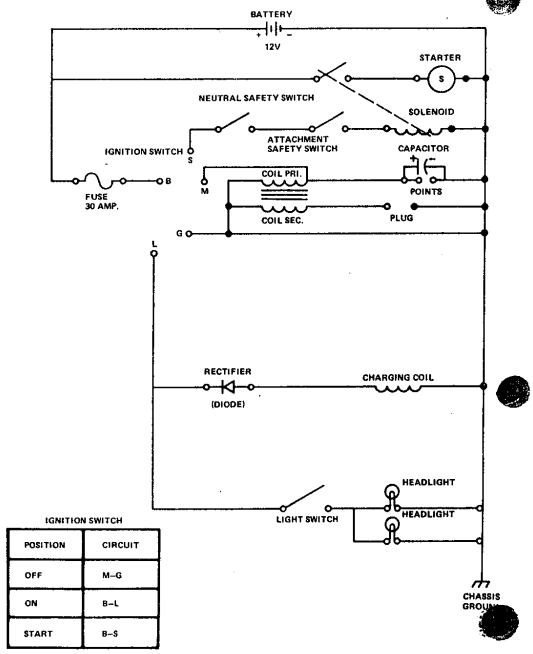

IGNITION SWITCH

POSITION	CIRCUIT
OFF	M–G
ON	B–L
START	B–S

REPAIR PARTS

ELECTRIC & ENGINE

36" RIDING LAWN TRACTOR-MODEL NUMBER L8218CR

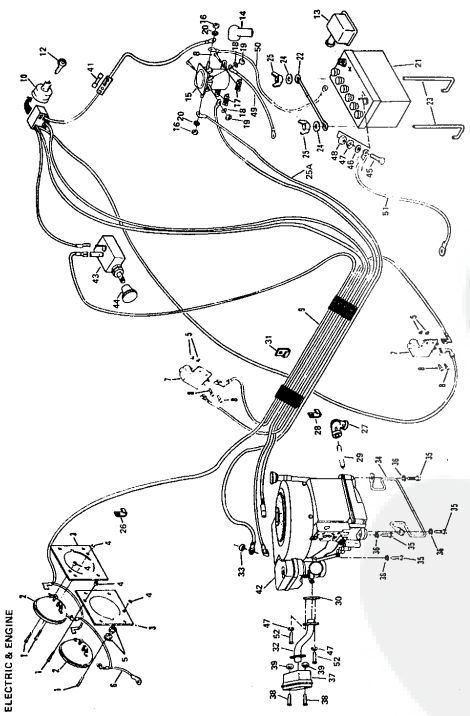

KEY NO.	PART NO.	DESCRIPTION
1	3236P	Screw, Machine Truss Head No. 10 - 24 x 1
2	6452R	Headlight
3	7305S	Headlight Support
4	4632H	Nut, Lock No. 10 - 24
5	5611P	Nut, Keps No. 10 - 24 UNC
6	7156R	Wire Assembly
7	7755R	Safety Switch
8	3359P	Screw, Machine Phillips Head No. 10 - 24 x 1/2
9	1796J	Wire Harness
10	4406R	Ignition Switch (Inc. Ref No. 12)
12	5572A	Key Set
13	225J	Terminal Cover
14	715J	Terminal Cover
15	7702A	Solenoid
16	538P	*Nut, Hex Jam 5/16 - 24 UNF
17	579P	Nut, Speed No. 10 - 24 UNC
18	1096P	*Nut, Hex No. 10 - 32 UNF
19	543P	*Lockwasher 5/16
20	1003P	Key
21	7703J	Battery Rod
23	7045S	Battert Bolt
24	1579P	Washer, Flat 3/4 x 16 Ga.
25	577P	Wing Nut 1/4 - 20 UNC
25A	599J	Wire - Solenoid to Starter
26	2321R	Insulated Clip
27	4017P	Std. Elbow 90° 3/8 - 18 NPT
28	5320R	Insulated Clip
29	7346S	Nipple
30	7344S	Exhaust Gasket
31	6734R	Insulated Clip
32	7471A	Exhaust Tube
33	1758G	Nut, Lock 1/4 - 20 UNC
34	1758G	Bolt, Carriage
35	5608P	Screw, Hex Hd. Thd. Rolling 3/8 - 16 x 1 - 1/2
36	1004P	*Nut, Hex Lock 3/8
37	7471S	Muffler
38	3219P	Hex Bolt 5/16 - 18 x 2 - 3/4
39	5572P	Lockwasher 5/16 - 18
41	6347R	Fuse - 30 Amp.
42	191707	Engine - Briggs and Stratton 8 H.P. Type No. 5627-01 (See pages 26 thru 28)
43	7793R	Light Switch
44	7794R	Knob, Light Switch
45	3302P	*Screw, Hex Hd. 3/8 - 24
46	1569P	*Washer 9/32 x 5/8 x 16 Ga.
47	1002P	*Lockwasher 1/4 Heavy
48	5605P	*Nut, Hex Jam 1/4 - 20 UNC
49	8027R	Wire - Ground Solenoid
50	8971	Battery Cable
51	5615P	Clip, Retainer
52	7054S	Screw, Hex Hd. 1/4 - 20 x .82
—	1805J	Fact. and Warranty Tag
—	1758J	Owners Manual

*STANDARD HARDWARE-PURCHASE LOCALLY

OPTIONAL EQUIPMENT
1A92-11 Spark Arrestor

36" RIDING LAWN TRACTOR--MODEL NUMBER L8218CR

CLUTCH-BRAKE & DRIVE

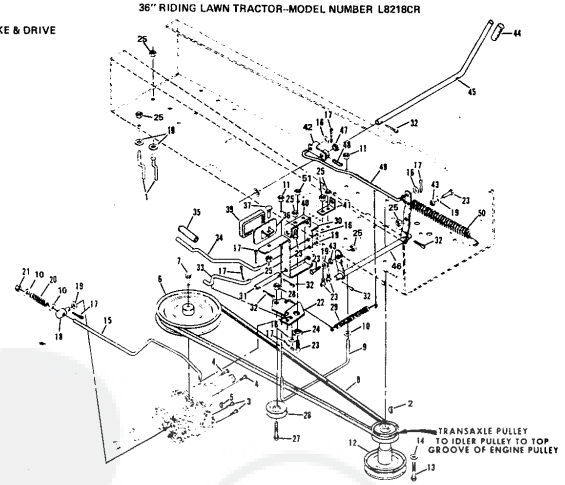

36" RIDING LAWN TRACTOR--MODEL NUMBER L8218CR

CLUTCH-BRAKE & DRIVE

REF. NO.	PART NO.	DESCRIPTION
1	71200	Belt Guide
2	65053	Key, Woodruff No. 6
3	6059P	Screw, Hex Head w/Washer 5/16 - 18 x 7/8
4	6060P	Screw, Hex Head w/Washer 5/16 - 18 x 1 - 1/8
5	52859	Key, Woodruff No. 61
6	73542	Pulley - Transaxle
7	6058P	Screw, Machine w/Washer 1/4 - 20 x 3/4 Gr. 5
8	73794	V-Belt
9	71241	Mid Belt Guide
10	1611P	Washer, 13/32 x 7/8 x 16 Ga.
11	545P	Locknut 3/8 - 16
12	71923	Pulley - Engine
13	6063P	Screw, Machine w/Ext. Lockwasher 3/8 - 24 x 1 - 3/8
14	1610P	Washer, 3/8 x 1 - 1/4 x 6 Ga.
15	73792	Brake Rod
16	1507P	Washer, 13/32 x 3/4 x 16 Ga.
17	2503P	*Cotter Pin 3/32 x 3/4
18	71238	Trunion
19	1599P	Washer, 11/32 x 3/4 x 16 Ga.
20	71239	Brake Spring
21	591P	Locknut w/Washer 3/8 - 16 UNC
22	71201	Idler Bracket
23	3010P	*Bolt, Hex Head 5/16 - 18 x 3/4
24	71202	Bushing
25	575P	Nut, Lock 5/16 - 18 UNC
26	67400	Pulley - Idler
27	3027P	*Bolt, Hex Head 3/8 - 16 x 1 - 1/2
28	579P	Nut, Lock 3/8 - 16 UNC
29	2044J	Spring - Idler
30	390J	Foot Pedal
31	71223	Pedal Shaft
32	2509P	*Cotter Pin 1/8 x 1
33	74419	Clutch Rod
34	373J	Park Brake Rod
35	71226	Grip
36	71222	Pedal Plate
37	16P	*Bolt, Carriage 5/16 - 18 x 3/4
39	67365	Foot Pad
40	71199	Pedal Bracket
41	71204	Switch Bracket
42	73229	Clutch Arm Assembly
43	71195	Spacer
44	71246	Grip
45	71242	Clutch Handle
46	71191	Clutch Arm Assembly
47	1545P	Washer, 17/32 x 1 x 16 Ga.
48	52379	Spring Pin 3/16 x 1
49	71474	Blade Clutch Rod
50	71248	Spring
51	590P	Locknut w/Washer 5/16 - 18 UNC

*STANDARD HARDWARE--PURCHASE LOCALLY

36" RIDING LAWN TRACTOR--MODEL NUMBER L8218CR

CHASSIS

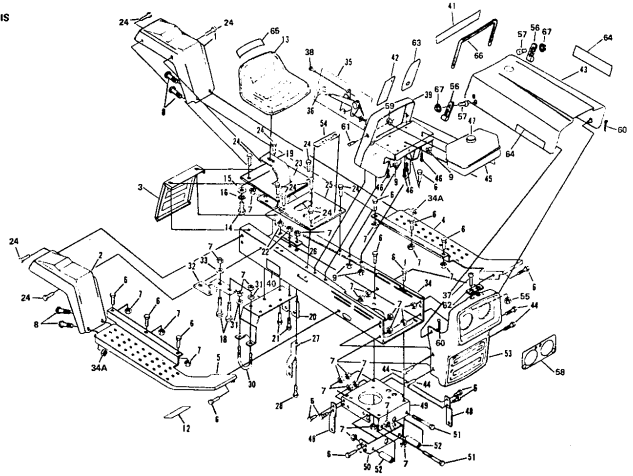

36" RIDING LAWN TRACTOR--MODEL NUMBER L8218CR

CHASSIS

REF. NO.	PART NO.	DESCRIPTION
1	388J	Fender - L.H.
2	389J	Fender - R.H.
3	1538J	Rear Cover
4	1539J	Foot Rest, L.H.
5	1540J	Foot Rest, R.H.
6	3010P	*Bolt, Hex Head 5/16 - 18 x 3/4
7	575P	Nut, Lock 5/16 - 18 UNC
8	3008P	Bolt, Hex Head 5/16 - 18 x 1/2
9	532P	Nut, Keps 5/16 - 18 UNC
12	1133J	Decal - Clutch and Brake
13	1496J	Seat
14	3042P	*Bolt, Hex Head 1/2 - 13 x 1
15	1548P	Washer 17/32 x 1 - 3/16 x 11 Ga.
16	1000P	*Washer, Lock 1/2
18	3012P	*Bolt, Hex Head 5/16 - 18 x 1 - 1/4 Gr. 5
19	73790	Seat Spring
20	73791	Transaxle Support
21	3023P	*Bolt, Hex Head 3/8 - 16 x 1
22	545P	Nut, Lock 3/8 - 16
23	1790J	Cover Plate
24	5612P	Screw, Hex Hd. Thd. Rolling 5/16 - 18 x 1/2
25	677A87	Chassis Cover
26	71507	Support
27	7118B	Axle Strap
28	3011P	*Bolt, Hex Head 5/16 - 18 x 1
30	71606	Clamp
31	1609P	Washer, 5/16 x 3/4 x 11 Ga.
32	71205	Tow Hitch
33	1610P	Washer,3/8 x 1 - 1/4 x 6 Ga.
34	1320J	Chassis
34A	585P	Nut, Keps Jam 5/16 - 18 UNC
35	1544J	Remote Control Ass'y. (Inc. Ref. No. 36)
36	61159	Knob - Remote Control
37	3320P	*Screw, Pan Hd. Machine No. 10 - 24 x 1/2
38	5606P	Screw, Hex Washer Hd. Thd. Cutting 1/4 - 20 x 1/2
39	677A93	Dash Ass'y.
40	75078	Decal, "8"
41	1136J	Decal - Dash, Instructions
42	1135J	Decal - Dash, Controls
43	677A12	Hood Ass'y.
44	3386P	Screw, Hex Washer Hd. 5/16 - 18 x 3/4
45	73427	Fuel Tank
46	5547P	Screw, Truss Hd. Phillips Thd. Cutting 1/4 - 20 x 3/4
47	74145	Fuel Cap
48	71190	Brake Rod Bracket
49	1839J	Engine Base
50	71178	Rocker Bar Support
51	3271P	*Bolt, Hex Head 5/16 - 18 x 2 - 3/4
52	71431	Bushing
53	374J	Grill Frame
54	74307	Battery Cap
55	4632H	Locknut No. 10 - 24 UNC
56	8898R	Hood Latch
57	3068P	Screw, Phillips P.H. Machine No. 10 - 24 UNC x 3/8
58	602J	Decal - Headlight
59	561P	Nut, Keps No. 10 - 24 UNC
60	2503P	*Cotter Pin 3/32 x 3/4
61	8753R	Hood Latch Pin
62	470J	Hood Bumper
63	1134J	Decal - Dash, L.H.
64	242J	Decal, Hood
65	245J	Decal, Seat Back
66	892J	Hood Strip
67	2029J	Weldnut

*STANDARD HARDWARE--PURCHASE LOCALLY

REPAIR PARTS

36" RIDING LAWN TRACTOR–MODEL NUMBER L8218CR

MOWER

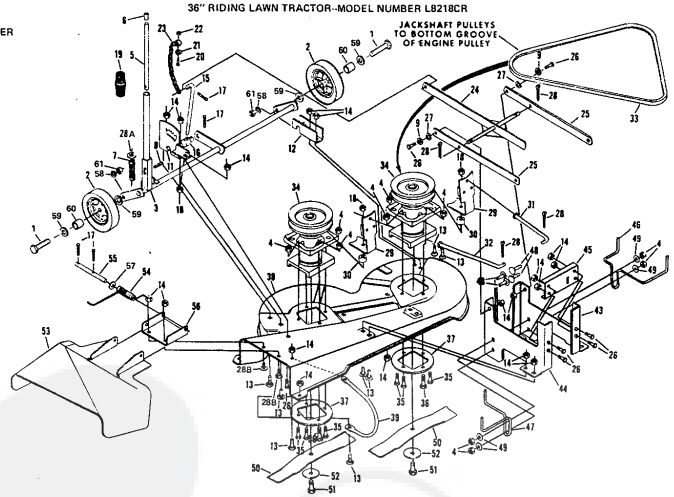

REPAIR PARTS

36" RIDING LAWN TRACTOR–MODEL NUMBER L8218CR

STEERING AND WHEELS

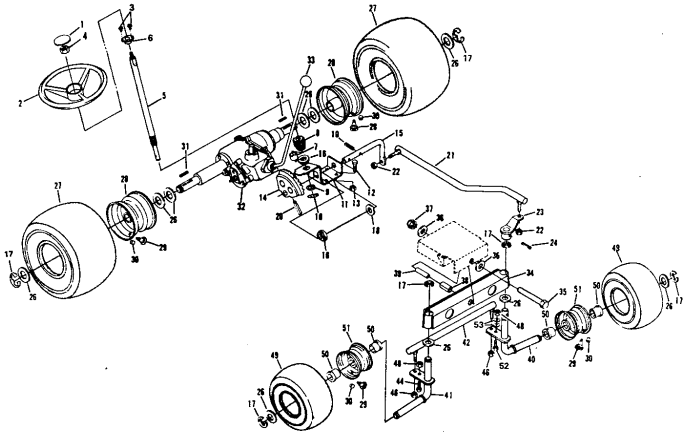

REPAIR PARTS

36" RIDING LAWN TRACTOR–MODEL NUMBER L8218CR

MOWER

REF. NO.	PART NO.	DESCRIPTION
1	3199P	Hex Bolt 3/8 - 24 x 2 - 3/4 Gr. 5
2	9536H	Gauge Wheel
3	677A134	Pivot Rod Assembly
4	545P	Nut, Lock 3/8 - 16 UNC
5	1663J	Rod - Plunger
6	9479R	Cap - Lever Plunger
7	71669	Spring
8	8540R	Pin - Drive Lork
9	1599P	Washer, 11/32 x 3/4 x 16 Ga.
11	72937	Quadrant Assembly
12	67337	Pivot Rod Support
13	67P	*Bolt, Carriage 5/16 - 18 x 3/4 Gr. 5
14	575P	Nut, Lock 5/16 - 18 UNC
15	71300	Adjustment Rod
16	71301	Trunion
17	2503P	*Cotter Pin 3/32 x 3/4
18	591P	Locknut W/Washer 3/8 - 16 UNC
19	1747J	Grip
20	3224P	*Screw, Pan Hd. Machine 1/4 - 20 x 1
21	1575P	Washer, 9/32 x 1 x 16 Ga.
22	574P	Nut, Hex Lock 1/4 - 20 UNC
23	74014	Sway Chain
24	72915	Parallel Rod Assembly
25	71297	Parallel Link
26	3010P	*Bolt, Hex Head 5/16 - 18 x 3/4
27	71616	Spacer
28	2506P	*Cotter Pin 1/8 x 1
28A	1615P	Washer, 15/32 x 3/4 x 16 Ga.
28B	5P	*Bolt, Carriage Sh. Shoulder 5/16 - 18 x 3/4
29	677A46	Brake Assembly
30	71522	Spacer, Brake Spring
31	71525	Brake Rod - L.H.
32	71524	Brake Rod - R.H.
33	62828	Belt
34	677A181	Jackshaft Assembly
35	3023P	*Bolt, Hex Head 3/8 - 16 x 1
36	3229P	*Bolt, Hex Head 3/8 - 16 x 1 - 1/2
37	71575	Plate
38	677A88	Housing w/Silk Screening
39	71647	Housing Skid
43	71276	Housing Bracket - L.H.
44	71277	Housing Bracket - R.H.
45	71278	Channel
46	71298	Belt Keeper - L.H.
47	71299	Belt Keeper - R.H.
48	20P	*Bolt, Carriage 3/8 - 16 x 1
49	1614P	Washer, 13/32 x 7/8 x 13 Ga.
50	71285	Blade
51	6065P	Screw, Hex Head w/Washer - Nylon Patch 3/8 - 24 x 7/8 Gr. 5
52	67354	Washer, 25/64 x 2 - 3/8 x 5/32
53	677A89	Deflector
54	71526	Deflector Spring
55	71555	Hinge Rod
56	71528	Bracket-Deflector
57	1623P	Washer 11/32 x 7/8 x 16 Ga.
58	1004P	Lockwasher 3/8
59	1513P	Washer 13/32 x 13/16 x 16 Ga.
60	7375H	Bushing
61	515P	Hex Nut 3/8 - 24 UNF

*STANDARD HARDWARE–PURCHASE LOCALLY

REPAIR PARTS

36" RIDING LAWN TRACTOR–MODEL NUMBER L8218CR

STEERING AND WHEELS

REF. NO.	PART NO.	DESCRIPTION
1	1114J	Steering Wheel Insert
2	506J	Steering Wheel
3	5614P	Hex Washer Hd. Sht. Metal Screw No. 10 x 1/2 Type AB
4	588P	*Nut, Hex Jam 1/2 - 20 UNF
5	1596J	Steering Shaft
6	1554J	Bushing
7	74580	Shaft Spacer
8	74581	Pinion Gear
9	1635P	Washer, 5/8 x 1-1/2 x 11 Ga.
10	52379	Spring Pin 3/16 x 1
11	74577	Steering Bracket
12	3010P	*Bolt, Hex Head 5/16 - 18 x 3/4
13	575P	Nut, Lock 5/16 - 18 UNC
14	71172	Gear
15	1526J	Steering Rod
16	71208	Bushing
17	5000P	E-Ring
18	1618P	Washer, 21/32 x 1 - 1/4 x 13 Ga. (0 - 2 As Needed)
20	73446	Drive - Lock Pin
21	71219	Drag Link
22	7810H	Locknut, Hex 3/8 - 24 UNF
23	71185	Steering Arm Assembly
24	62079	Spring Pin 1/4 x 1 - 1/4
26	1652P	Washer 25/32 x 1 - 1/4 x 16 Ga.
27	71653	Tire (18.00 - 9.50 x 8)
28	71652	Rim
29	65139	Valve Stem
30	59192	Valve Cap
31	66414	Square Key 3/16 x 2
32	794191A	Transaxle Assembly Model 143.658A (See Pages 24 and 25)
33	55862	Knob - Transmission
34	677A91	Rocker Bar Assembly
35	3385P	Bolt, Hex Head 1/2 - 13 x 3
36	1613P	Washer, 17/32 x 7/8 x 16 Ga.
37	581P	Nut, Lock 1/2 - 13 UNC
38	67151	Bushing
39	71188	Pivot Spacer
40	73236	Kingpin Assembly - L.H.
41	73237	Kingpin Assembly - R.H.
42	73240	Tie Rod
44	3021P	*Bolt, Hex Head 3/8 - 16 x 3/4
46	582P	Nut, Lock 5/16 - 24 UNF
48	579P	Nut, Lock 3/8 - 16 UNC
49	71651	Tire (15 x 6.00 x 6)
50	625J	Bearing
51	626J	Rim Ass'y. (Inc. Ref. No. 50)
52	3023P	Bolt, Hex 3/8 - 16 x 1
53	1622P	Washer 13/32 x 7/8 x 7 Ga.

* STANDARD HARDWARE–PURCHASE LOCALLY

REPAIR PARTS

36" RIDING LAWN TRACTOR-MODEL NUMBER L8218CR
TRANSAXLE NO. 794191A-MODEL NUMBER 143.658A

ALL TRANSAXLE PARTS MUST BE PURCHASED THROUGH AND SERVICE PERFORMED BY YOUR LOCAL TECUMSEH DEALER.

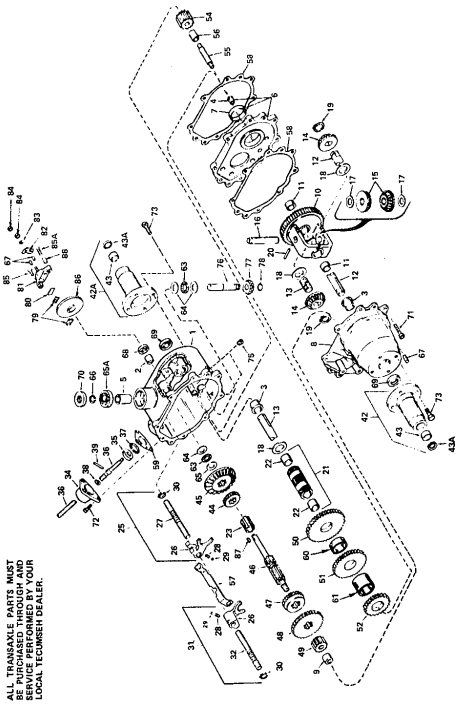

KEY NO.	PART NO.	DESCRIPTION
1	794191A	Complete Transaxle
2	780083	Gear Ass'y., Transaxle (Inc. No's. 2, 3 & 5)
3	780084	Bearing - Ball
4	780059	Bearing, Bronze
5	780060	Bearing, Bronze
6	780061	Bearing, Bronze
7	780062	Plate Ass'y., Center (Inc. No's. 4 & 7)
8	780063	Bearing, Bronze
9	772042	Cover Ass'y., Transaxle (Inc. No's. 3 & 9)
10	780064	Bearing, Bronze
11	778953	Gear Ass'y., Differential (Inc. No. 11)
12	780004	Bearing, Bronze
13	780065	Axle, Left Hand
14	774220	Axle, Right Hand
15	780066	Gear, Bevel
16	778098	Pinion, Bevel
17	780034	Pin, Drive
18	780035	Washer, Thrust
19	780036	Washer, Thrust
20	793044	Pin, Roll
21	780080	Sleeve Ass'y., Countershaft
22	780066	Gear, Bevel (22)
23	780067	Bearing, Bronze
24	780068	Shaft, Idler
25	780069	Gear Ass'y., Shift (1st & Rev.) (Inc. No's. 26 thru 30)
26	780070	Rod, Shift
27	780083	Rod, Shift
28	792003	Spring
29	792004	Ball, Steel
30	792017	Ring, Snap
31	780084	Shaft Ass'y., Shift (2nd & 3rd) (Inc. No's. 26, 28, 29, 30 & 32)
32	780085	Rod, Shift
33	780086	Lever, Shift
34	784094	Keeper, Shift Lever
35	792016	Ring, Snap
36	792001	Ring, Quad
37	792002	Plug, Pipe
38	783038A	Housing Ass'y., Axle (Inc. No's. 43 & 43A)
39	783039A	Housing Ass'y., Axle (Inc. No's. 43 & 43A)
42	530105	Bearing, Needle
43	788042	Seal, Oil
43A	778954	Gear (16 Teeth)
44	778955	Gear (19 Teeth)
45	778957	Gear, Bevel (33 Teeth)
46	778138	Shaft, Shifter & Brake
47	778139	Gear, Shifting (Fwd. & 3rd)
48	778959	Gear, Shifting (1st & Rev.)
49	778960	Gear, Countershaft
50	778140	Gear, Countershaft Drive (39 Teeth)
51	778141	Gear, Countershaft (35 Teeth)
52	778142	Gear, Countershaft (20 Teeth)
53	778964	Gear, Reverse Idler
54	778963	Gear, Reverse Idler
55	778143	Gear, Countershaft
56	786036	Spacer, Reverse Idler
57	784087	Stop, Shifter
58	784088	Gasket, Shift Lever & Cover
59	786033	Gasket, Shift Lever Housing
60	786078	Seal, Oil
61	786079	Spacer
63	780071	Bearing, Thrust
64	780072	Washer, Thrust
65	780073	Washer, Thrust
65A	780093	Bearing, Ball
66	780074	Bearing, Ball
67	786026	Pin, Dowel
68	786064	Seal, Oil
69	788039	Seal, Oil
70	788035	Scr., Cl. Flange Hex Hd. 1/4 - 20 x 1 - 1/4
71	792036	Scr., Soc. Set, Cup Pt. 1/4 - 20 x 3/4
72	792037	Scr., Soc. Set, Cone Pt. 1/4 - 20 x 1
73	792039	Screw, Hex Hd. Sems 5/16 - 18 x 1
75	776102	Plate, Parking Lock
76	776103	Shaft, Input
77	786100	Ring, Retaining
78	786101	Ring, Retaining
79	786100	Pin, Roll
80	786105	Plate, Brake Pad
81	790003	Holder, Brake Pad
82	790004	Pin, Cotter
83	792076	Washer, Flat
84	792075	Screw, Hex Hd.
85	792073	Scrs., Hex Hd. Cap, 1/4 - 20 x 1 - 1/4
85A	792085	Tred, Forming, Scrs., Hex Hd. Cap, 1/4 - 20 x 2 - 1/4
86	792008	Thrd. Forming
87	792009	Screw, Hex Hd.
88	786066	Key, Woodruff No. 61
		Spacer

REPAIR PARTS

36" RIDING LAWN TRACTOR--MODEL NUMBER L8218CR
BRIGGS & STRATTON 8 H.P. ENGINE--MODEL NO. 191707, TYPE NO. 5627-01

CYLINDER, CRANKSHAFT AND ENGINE BASE GROUP

ALL ENGINE PARTS MUST BE PURCHASED THROUGH AND SERVICE PERFORMED BY YOUR LOCAL BRIGGS AND STRATTON DEALER.

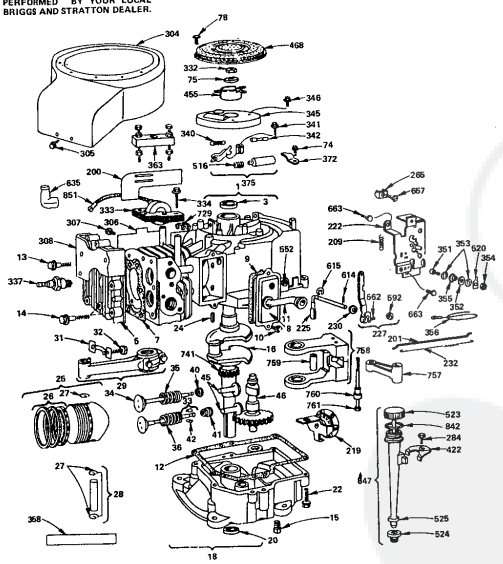

REPAIR PARTS

36" RIDING LAWN TRACTOR--MODEL NUMBER L8218CR
BRIGGS & STRATTON 8 H.P. ENGINE--MODEL NO. 191707, TYPE NO. 5627-01

KEY NO.	PART NO.	DESCRIPTION
1	392005	Cylinder Assembly (Inc. Key No. 3)
2	391726	Bushing - Cylinder
3	294606	Seal - Oil
5	212286	Head - Cylinder
7	270430	Gasket - Cylinder
8	391406	Breather Tube Assembly
9	27803	Gasket - Valve Cover
10	93538	Screw - Sem
11	280005	Tube - Breather
12	27750	*Gasket - Crankcase Cover - 1/64" Thick
12	27876	*Gasket - Crankcase Cover - .005" Thick
12	27877	*Gasket - Crankcase Cover - .009" Thick
13	93211	Screw - Cylinder Head (2 - 21/32" Long)
14	93723	Screw - Cylinder Head (3" Long)
15	91084	Plug, Oil Drain
16	391757	Crankshaft
18	298616	Sump - Oil (Inc. Key No's. 12 & 20)
20	298423	Seal - Oil
22	93585	Screw - Sump
24	61760	Key - Flywheel
25	391673	Piston Assy. - Std.
25	391674	Piston Assy. - .010" O.S.
25	391675	Piston Assy. - .020" O.S.
25	391676	Piston Assy. - .030" O.S.
26	391669	Ring Set - Piston - Std.
26	299743	Ring Set - Piston - Std. Chrome
26	391670	Ring Set - Piston - .010" O.S.
26	391671	Ring Set - Piston - .020" O.S.
26	391672	Ring Set - Piston - .030" O.S.
27	68546	Lock - Piston Pin
28	295840	Pin Assembly - Piston - Standard
28	295841	Pin Assembly - Piston - .005" O.S.
29	390402	Rod Assy. - Connecting
		NOTE: For Connecting Rod with .020" Undersize Crankpin Bore - Order No. 390773
31	222114	Lock - Connecting Rod Screw
32	92059	Screw - Connecting Rod
33	390419	Valve - Exhaust
34	261055	Valve - Intake
35	65906	Spring - Intake Valve
36	26828	Spring - Exhaust Valve
40	221586	Retainer - Intake Valve
41	292200	Rotocoil - Exhaust Valve
42	93630	Retainer - Exhaust Valve Rotocoil
45	260933	Tappet - Valve
46	211689	Gear - Cam
74	93042	Screw - Sems
75	220865	Washer - Spring
78	93805	Screw - Sem
200	221760	Guide - Air
201	260971	Link - Governor
209	261306	Spring - Governor
219	392718	Oil Slinger - Gov. Gear and Bracket Assembly
222	390662	Plate - Gov. Control
225	231058	Crank - Gov. (1/4" Dia.)
227	391733	Lever Assy. - Governor (For 1/4" Dia. Crank)
230	222450	Washer - Gov. Lever (1/4" I.D.)
232	280594	Spring - Governor Link
265	221535	Clamp - Casing
284	93804	Screw - Clamp Mtg.
304	391379	Housing - Blower
305	93158	Screw - Blower Housing Mounting Sem
306	222830	Shield - Cylinder
307	93163	Screw, Cylinder Shield Mtg. Sem
308	222636	Cover, Cylinder Head
332	92284	Nut, Flywheel
333	298968	Armature Assembly
334	93381	Screw, Armature Mounting Sem
337	293918	Plug, Spark (1 - 1/2" High - 38 M.M. Resistor)
		NOTE: Ignition Cable Terminal No. 221798
340	26018	Spring - Breaker Arm
341	93381	Screw - Breaker Arm Mounting Sem
342	65704	Plunger - Breaker Point
345	222117	Cover - Breaker Point
346	93705	Screw - Sem
351	91820	Screw - Terminal
352	66068	Washer - Insulating
353	92791	Washer - Lock Shakeproof
354	90576	Nut - Hex 8 - 32
355	66554	Collar - Insulating
358	299500	Wire - Ground
368	299577	Gasket Set
363	19165	Puller - Flywheel
372	220477	Clamp - Condenser
375	294628	Breaker Points and Condenser Set
		NOTE: 299061 Ignition Kit Includes 294628 Point Set, 65704 Plunger, 61760 Key - Flywheel
422	222502	Clamp - Oil Filler Tube
455	222561	Cup - Screen Mounting
468	222562	Screen - Flush Rotating
516	280374	Spring - Connector
520	93722	Terminal Spade
523	391840	Cap and Dipstick - Oil Filler
524	68838	Seal - Filler Tube
525	280133	Tube - Oil Filler
557	231055	Bushing - Gov. Crank (1/4" I.D.)
562	92613	Bolt - Governor Lever
592	231082	Nut, Hex 10 - 24
614	93306	Cotter - Hair Pin
615	92307	Retainer - E Ring
635	66538	Elbow - Spark Plug
657	93496	Screw - Sem
663	93572	Screw
729	221907	Clip - Wire
741	261195	Gear - Timing
757	212359	Link - Counterweight
758	390172	Counterweight Assy.
759	298909	Pin - Counterweight
760	230940	Spacer - Counterweight
761	93374	Screw - Counterweight
842	270920	Seal - Filler Cap
847	392066	Filler Group - Oil
851	221798	Terminal - Ignition Cable
		*INCLUDED IN GASKET SET - PART NO. 299577

REPAIR PARTS

36" RIDING LAWN TRACTOR–MODEL NUMBER L8218CR
BRIGGS & STRATTON 8 H.P. ENGINE–MODEL NO. 191707, TYPE NO. 5627-01
AIR CLEANER, CARBURETOR AND FLYWHEEL GROUP

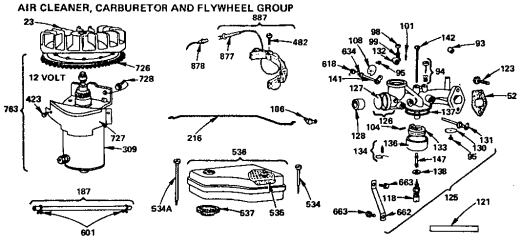

KEY NO.	PART NO.	DESCRIPTION
23	391983	Flywheel and Ring Gear Ass'y. - Magneto
52	270624	Gasket - Carburetor Mounting
93	23108	Bushing - Throttle Shaft
94	292881	*Valve Assembly - Carburetor Idle
95	93499	Screw - Throttle and Choke Valve Mtg. Sem
98	91920	Screw - Machine Fill. Hd. 8 - 32 x 5/8"
99	28157	Spring - Throttle Adjustment
101	93043	Pin - Throttle Stop
104	230896	*Pin - Float Hinge
108	222010	Valve Choke
118	391233	*Valve Needle
121	299852	Carburetor Overhaul Kit
123	93357	Screw - Carburetor Mtg.
125	390811	Carburetor Assembly
126	299851	Body Assembly - Carburetor
127	221997	*Plug - Welch
128	211682	Venturi - Carburetor
130	221988	Valve - Throttle
131	391512	Shaft and Lever - Throttle
132	211712	Stop - Throttle
133	299707	Float - Carburetor
134	299096	*Valve - Fuel Inlet
136	221995	Bowl - Float
137	270611	*Gasket - Float Bowl
138	222014	*Washer - Float Bowl
141	390684	Shaft and Lever - Choke
142	299740	*Nozzle - Carburetor
147	230932	*Screw - Nozzle
180	67218	Connector - Fuel Pipe
187	298004	Pipe - Fuel
216	261117	Link Choke
309	392749	Motor and Drive Ass'y. (See Breakdown of Parts Below)
423	93410	Screw - Sem
482	93621	Screw - Sem
534	93622	Screw - Air Cleaner
534A	93323	Screw - Air Cleaner
535	270528	Element - Air Cleaner
536	391399	Cleaner Assembly - Air
	Uses 280111	Support - Air Cleaner Element (Plastic)
537	270539	Gasket - Air Cleaner
601	93053	Clamp - Fuel Pipe
618	281116	Spring - Choke Return
634	270382	Washer - Choke Shaft
662	222027	Bracket - Carburetor
663	93573	Screw
726	392134	Gear - Ring
727	390233	Cover and Shield - Starter
728	93523	Screw - Sem
877	393814	Diode & Conn. Assembly
878	393422	Alt. Harness Assembly
887	391529	Stator-Alternator

*Included in Carburetor Overhaul Kit - Part No. 299852

STARTER MOTOR GROUP

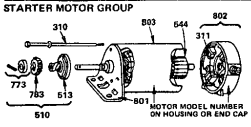

KEY NO.	PART NO.	DESCRIPTION
310	391708	Thru Bolt Ass'y.
311	391705	Brush Ass'y.
610	391461	**Drive Ass'y.
544	392747	Armature Ass'y.
801	391751	End Cap Ass'y. Drive
802	390646	*End Cap Ass'y. Commutator
803	392744	Housing Ass'y.

*Includes Brush Set
**Includes No. 391135 Clutch Ass'y. (Key No. 513)
No. 280104 Gear (Key No. 783)
No. 391462 Retainer and Pin (Key No. 773)

REPAIR PARTS

36" RIDING LAWN TRACTOR–MODEL NUMBER L8218CR

SCHEMATIC DIAGRAM

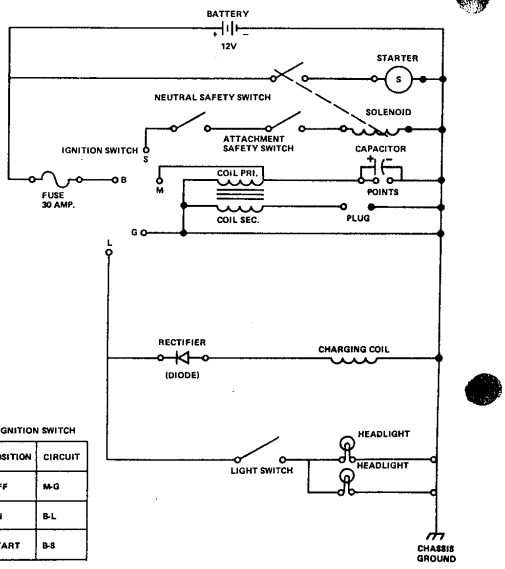

IGNITION SWITCH

POSITION	CIRCUIT
OFF	M-G
ON	B-L
START	B-S

WIRING INSULATED CLIPS

If Insulated Clips were removed for servicing of unit, they should be replaced to properly secure your wiring. There are three insulated Clips on your Tractor.

1. L.H. side of Tractor for safety switch wires (Key No. 28, page 14).
2. R.H. side of Tractor securing wire harness and cable wire (Key No. 31, page 14).
3. Headlight wire (Key No. 26, page 14).

36" ROPER SNOWER THROWER LAO49AR

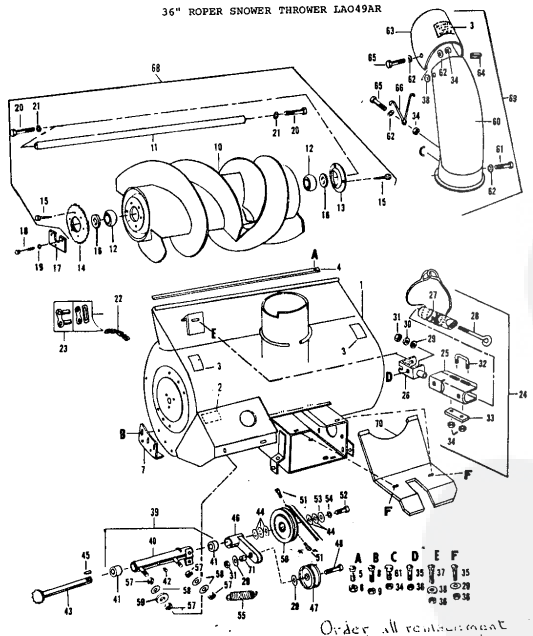

E519 (10.1.78)

Order all replacement parts for this model snowthrower from HABAN MFG CO. RACINE, WIS. 53404

36" ROPER SNOW THROWER LAO49AR

Ref. No.	Part No.	Description	No. Req.
1	11372	Assy-Header & Decal	1
2	9713	Decal	1
3	9663	Decal-Warning	3
4	3013	Blade-Scraper	1
5	7090	* Bolt-1/4-20 x 5/8 carriage	7
6	GM271178	* Nut & Lock washer 1/4-20 hex	7
7	3045	Shoe-Skid	2
8	STD533107	* Bolt-5/16-18 x 3/4 carriage	6
9	GM271184	* Nut & Lock washer 5/16-18 hex	6
10	9044	Assy-Auger	1
11	8350	Shaft-Auger	1
12	9052	Bearing-Auger Shaft	2
13	5473	Flange-Bearing	1
14	8287	Sprocket-Auger (35 tooth)	1
15	9131	* Screw-5/16-18 x 3/4 Self-tapping	9
16	4143	* Washer-1-1/32 x 1-1/2 x 1/8 flat	2
17	8185	Plate-Auger mounting	1
18	STD523106	* Bolt-5/16-18 x 5/8 hex hd	3
19	STD551131	* Washer-5/16 med lock	3
20	STD525012	* Bolt-1/2-13 x 1-1/4 hex hd	2
21	STD551150	* Washer-1/2 med lock	2
22	3911	Chain-Auger Drive (70 links)	1
23	8456	Repair Kit for Chain	1
24	9283	Assy-Stack Drive Bracket	1
25	9030	Shroud-Stack Drive	1
26	9032	Assy-Brkt. & Tube	1
27	8346	Assy-Cable,Tube & Sleeves	1
28	3955	Eye Bolt-Drive Tube	1
29	GM120388	* Washer-7/16 x 1 x .083 flat	5
30	4772	Spring Washer	1
31	STD541437	* Nut-3/8-16 hex lock	2
32	8236	U-Bolt-Level Wind	1
33	8299	Strap-Friction	1
34	STD541425	* Nut-1/4-20 hex lock	6
35	STD533707	* Bolt-3/8-16 x 3/4 carriage	3
36	GM271190	* Nut & Lock Washer 3/8-16 hex	4
37	STD533710	* Bolt-3/8-16 x 1 carriage	1
38	4506	* Washer-13/32 x 1-1/2 x 16 ga.	3
39	11378	Assy-Jackshaft hsg.& bushings	1
40	11379	Assy-Jackshaft hsg.	1
41	3034	Bushing	2
42	5074	* Fitting-Grease	1
43	3143	Assy-Jackshaft & sprocket	1
44	3396	* Washer-49/64 x 1-1/2 x .0598 flat	1
45	STD580103	* Key-3/16 sq. x 1	1
46	11381	Assy-Idler Arm	1
47	11496	Assy-Idler Pulley	1
48	STD 723725	*Bolt - 3/8-16 x 2-1/2 hex hd	1
50	3384	Assy-Pulley & Hub	1
51	GM-142671	* Screw-Set 5/16-18 x 1/2 sq hd cup pt	2
52	STD523707	* Bolt-3/8-16 x 3/4 hex hd	1
53	GM446363	* Washer-3/8 x 7/8 x .083 flat	1
54	STD551137	* Washer-3/8 med lock	1
55	3059	Spring	1
57	STD541050	* Nut-1/2-13 hex	4
58	GM120389	* Washer-1/2 x 1-1/4 x .083 flat	3
59	6979	Washer	1
60	4957	Assy-Deflector & Elbow	1
61	STD522510	* Bolt-1/4-20x1/2 hex hd	2
62	3903	Washer-Cable	6
63	9766	Assy-Decal & Deflector	1
64	6558	Molding-Deflector	1
65	STD522507	* Bolt-1/4-20 x 3/4 hex hd	3
66	3076	Hook-Lift Spring	1
68	9043	Assy-Auger(36) Comp.	1
69	6457	Assy-Deflector & Elbow	1
70	11420	Guard-Drive Pulley	1
71	5713	Spacer	1

E520 (10.1.78)

*Standard hardware - purchased locally

36" ROPER SNOW THROWER LAO49AR

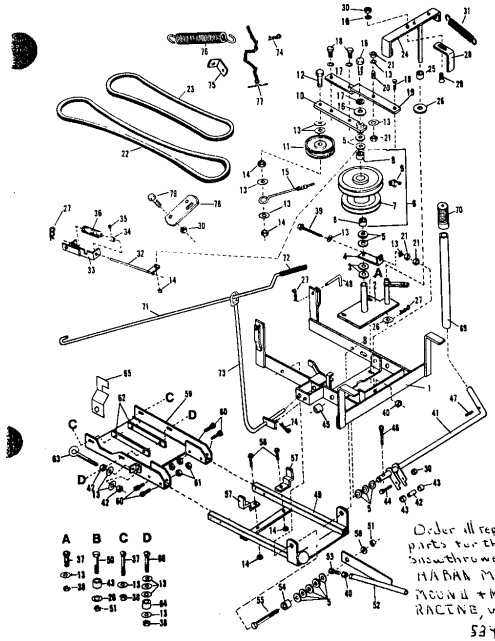

E521 (10.1.78)

36" ROPER SNOW THROWER LAO49AR

Ref. No.	Part No.	Description	No. Req.
1	11449	Assy - Mounting Frame (Upper)	1
2	11401	Assy - Pulley Mtg.Brkt.	1
3	STD551075	*Washer - 13/16 x 1-1/2 x .134 flat	2
4	11403	Bracket - Belt Adj.	1
5	3396	*Washer - 49/64 x 1-1/2 x .0598 flat	12
6	9775	Assy - Pulley Hsg(comp	1
7	9776	Assy - Pulley Hsg.	1
8	8689	Bearing - Needle	2
9	5074	*Fitting - Grease	1
10	11404	Assy - Clutch Arm	1
11	11496	Idler pulley	1
12	STD723725	*Bolt - 3/8-16 x 2-1/2 hex hd	1
13	GM120388	*Washer - 7/16 x 1" x .083 flat	24
14	STD541437	*Nut - 3/8-16 hex lock	5
15	11486	Wire - Belt Gage	1
16	GM446363	*Washer - 3/8 x 7/8 x .083 flat	2
17	STD551137	*Washer - 3/8 med lock	3
18	STD523707	*Bolt - 3/8-16 x 3/4 hex hd	4
19	11407	Bracket - Clutch Lever	1
20	11410	Stud - Brake Release	1
21	STD541237	*Nut - 3/8-16 hex jam	4
22	11361	V-belt	1
23	11367	V-belt	1
24	11442	Assy - Belt Brake	1
25	6017	Spacer	1
26	STD551050	*Washer - 17/32 x 1-1/16 x .095	3
27	STD624005	*Pin - Hair	4
28	11414	Popper - V-belt	1
29	STD533110	*Bolt - 5/16-18 x 1" carriage	1
30	GM271184	*Nut & L'washer 5/16 -18 hex	6
31	3059	Spring	1
32	11458	Assy - Clutch Rod	1
33	11019	Assy - Clutch Brkt.	1
34	10817	Collar	1
35	4122	*Set Screw - 5/16-18 x 5/16 socket	1
36	3077	Spring	1
37	STD533710	*Bolt - 3/8-16 x 1 carr	4
38	GM271190	*Nut & L'washer 3/8 -16 hex	6
39	6475	*Bolt - 3/8-16 x 3-1/2 full thd hex hd	1
40	STD541037	*Nut - 3/8-16 Lt hex	6
41	7925	Assy - Lift Bar	1
42	3027	Spacer	1
43	3346	Spacer	3
44	STD523120	*Bolt - 5/16-18 x 2 hex	1
45	6179	Spacer	1
46	GM120123	Pin - Cotter(1/8 x 1½)	1
47	STD571810	*Pin - Roll (3/16 x 1)	1
48	5736	Pin - Locating	2
49	9778	Assy - Mounting Plate	1
50	STD525015	*Bolt - 1/2-13 x 1-1/2 hex hd	1
51	STD541450	*Nut - 1/2-13 hex lock	2
52	9786	Assy - Lift Ext.	1
53	6441	Bolt - 3/8-16 x 2 hex hd full thd	1
54	11285	Spacer	1
55	STD525020	*Bolt - 1/2-13 x 2 hex	1
56	GM120389	*Washer - 1/2 x 1-1/4 x .083 flat	1
57	11461	Stop - Position	2
58	STD523710	*Bolt - 3/8-16 x 1 hex	2
59	11417	Assy - Pivot Brkt. channel	1
60	STD523117	*Bolt - 5/16-18 x 1-3/4 hex hd	4
61	STD541431	*Nut - 5/16-18 hex lock	4
62	11418	Strap - Header Channel	2
63	3058	Eye Bolt	2
64	5713	Spacer	2
65	11419	Bracket	1
66	GM126422	*Bolt - 3/8-16 x 2-1/4 carriage	2
69	6078	Handle - Lift	1
70	3339	Grip - Handle	1
71	4355	Rod - Crank	1
72	10840	Handle - Grip	1
73	11430	Assy - Crank Support	1
74	STD624010	*Pin - Hair Cotter	2
75	7630	Bracket	1
76	4798	Spring - Lift	1
77	5737	Assy - Chain & Toggle	1
78	8222	Strap - Rear Mtg.	2
79	STD523106	*Bolt - 5/16-18 x 5/8 hex hd	4
NP	11558	Manual - Instruction and Repair	1

E522 (10.1.78)

*Standard Hardware - Purchased Locally

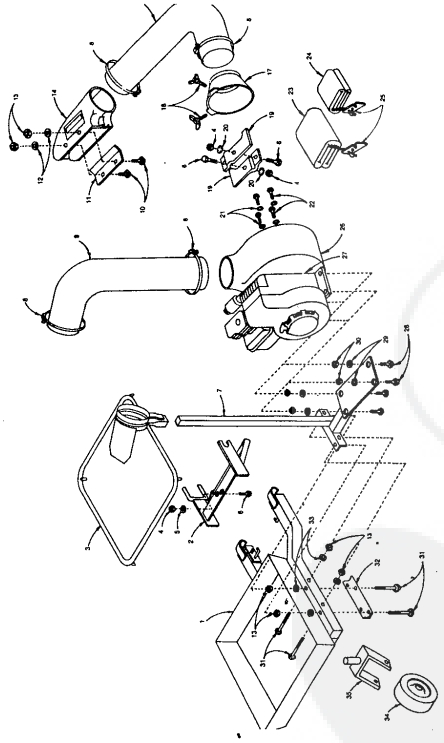

Repair Parts PEC-301

REPAIR PARTS

LAWN VAC Model Number PEC-301

KEY NO.	PART NUMBER	DESCRIPTION	REQ'D.
1	C-1-A	Tray and Support Assembly	1
2	C-4-N	Hitch Assembly	1
3	C-2-A	Bag Support Ring	1
4	STD-541050	Hex Nut, 1/2-13	3
5	STD	Lockwasher, 1/2 SAE	1
6	STD-525015	Hex Bolt, 1/2-13 x 1-1/2	3
7	C-3-A	Engine Support and Upright	1
8	C-20-A	Hose Clamp, 6" Dia.	4
9	C-18-A	Flex Hose, 6" Dia. x 40" Long	1
10	STD-533710	Carriage Bolt, 3/8-16 x 1	2
11	C-25-A	Boot Clamp Plate	1
12	STD-551037	Flat Washer, 3/8 SAE	2
13	STD-541237	Hex Nut, 3/8-16	6
14	B-361	Boot, 36" Mower Deck	1
16	C-21-A	Flex Hose, 6" Dia. x 36" Long	1
17	C-9-A	Blower Cone, 6" Dia.	1
18	W516182N	Wing Bolt, 5/16-18 x 2	2
19	W516182N	Wing Bolt, 5/16-18 x 2	2
19	C-11-A	Blower Blades (Set)	1
20	STD-551250	Internal Tooth Lockwasher, 1/2	2
21	STD-441231	Internal Tooth Lockwasher, 5/16	4
22	STD-623107	Hex Bolt, 5/16-24 x 7/8	4
23	C-16-A	Canvas Bag	1
24	C-17-A	Cnavas Bag Cover	1
25	C-29-A	Pull Cord Fastener	2
26	C-8-A	Blower Housing	1
27	143.654192	Tecumseh H35 454621 Model No. 143.654192	1
28	STD-523115	Hex Bolt, 5/16-18 x 1-1/2	4
29	STD-551131	Lockwasher, 5/16 SAE	4
30	STD-541131	Hex Nut, 5/16-18	4
31	STD-523725	Hex Bolt, 3/8-16 x 2-1/2	4
32	C-24-A	Reinforcing Angle	1
33	STD-551137	Lockwasher, 3/8 SAE	4
34	C-27-A	Wheel, 8-1/4 Dia. x 2-3/4 Wide	1
35	C-28-A	Caster Assembly	1
	PEC-301	Owner's Manual	1

Order All Replacement Parts For Model LA05
PE-CO
2907 Sweeten Creek Road.
Ashville, N.C. 28803

PARTS LIST
FOR
42" SNOW BLADE

MODEL [redacted] No. [redacted] LA06BAR

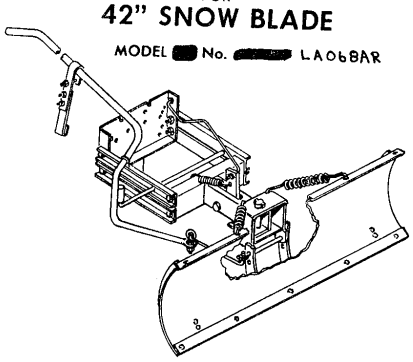

42" SNOW BLADE KIT PARTS LIST

Order Parts From
Peeco Inc.
1902 South Main
South Bend, Ind
46613

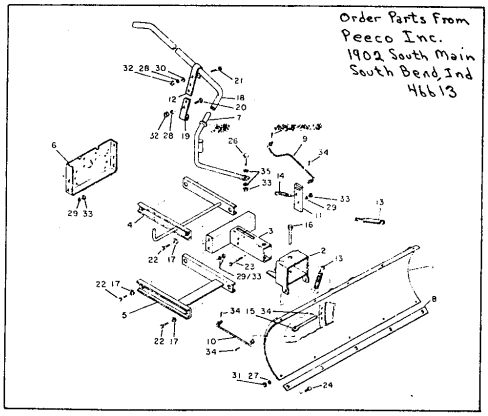

Ref. No.	Description	Qty.	Part No.
1	Blade Assembly	1	110061
2	Quadrant Assembly	1	110056
3	Frame Assembly	1	110062
4	Parallel Bar Assembly - Upper	1	110065
5	Parallel Bar Assembly - Lower	1	110069
6	Frame Mount Assembly	1	110060
7	Handle Assembly	1	120051
8	Wear Strip	1	10003
9	Link, Index	1	20052
10	Link, Pivot	1	20055
11	Bar, Index	1	10008
12	Latch, Upper	1	10057
13	Spring, Blade	2	65002
14	Spring, Tension	1	65001
15	Pin, Quadrant	1	20053
16	Rod, Quadrant	1	20050
17	Spacer, Parallel Bar	8	10058
18	Extension, Handle	1	20054

Ref. No.	Description	Qty.	Part No.
19	Latch, Lower	1	10071
20	Screw, Hex. Hd. Cap (5/16 - 18 x 1)	2	70058
21	Screw, Hex. Hd. Cap (5/16 - 18 x 1 1/2)	1	70061
22	Screw, Hex. Hd. Cap (3/8 - 16 x 1)	8	70057
23	Screw, Hex. Hd. Cap (3/8 - 16 x 2 1/2)	1	70043
24	Bolt, Carriage (1/4 - 20 x 3/4)	5	70010
25	Bolt, Carriage (5/16 - 18 x 3/4)	4	70044
26	Bolt, Eye (3/8 - 16 x 1)	1	70048
27	Washer, Med. Splitlock (1/4)	5	70012
28	Washer, Med. Splitlock (5/16)	5	70018
29	Washer, Med. Splitlock (3/8)	9	70058
30	Washer, Plain (5/16 SAE)	5	70016
31	Nut, Hex (1/4 - 20)	5	70015
32	Nut, Hex (5/16 - 18)	5	70020
33	Nut, Hex (3/8 - 16)	9	70006
34	Pin, Cotter (1/8 x 1)	5	70013
35	Nut, Jam (3/8 - 16)	3	70060
36	Handle Bar Grip	1	60001

MINIMUM PARTS ORDER $5.00. ALL STANDARD HARDWARE ITEMS MAY BE PURCHASED LOCALLY.