Flymo PARTNER

FLYMO & PARTNER OUTDOOR PRODUCTS

PARTS 8V

P991005

MODEL **Power Compact 330**

ILLUSTRATED PARTS LIST

9643302-01	9643302-22	9643302-67	9643302-86
GB,EI	CH	E.Euro	Euro

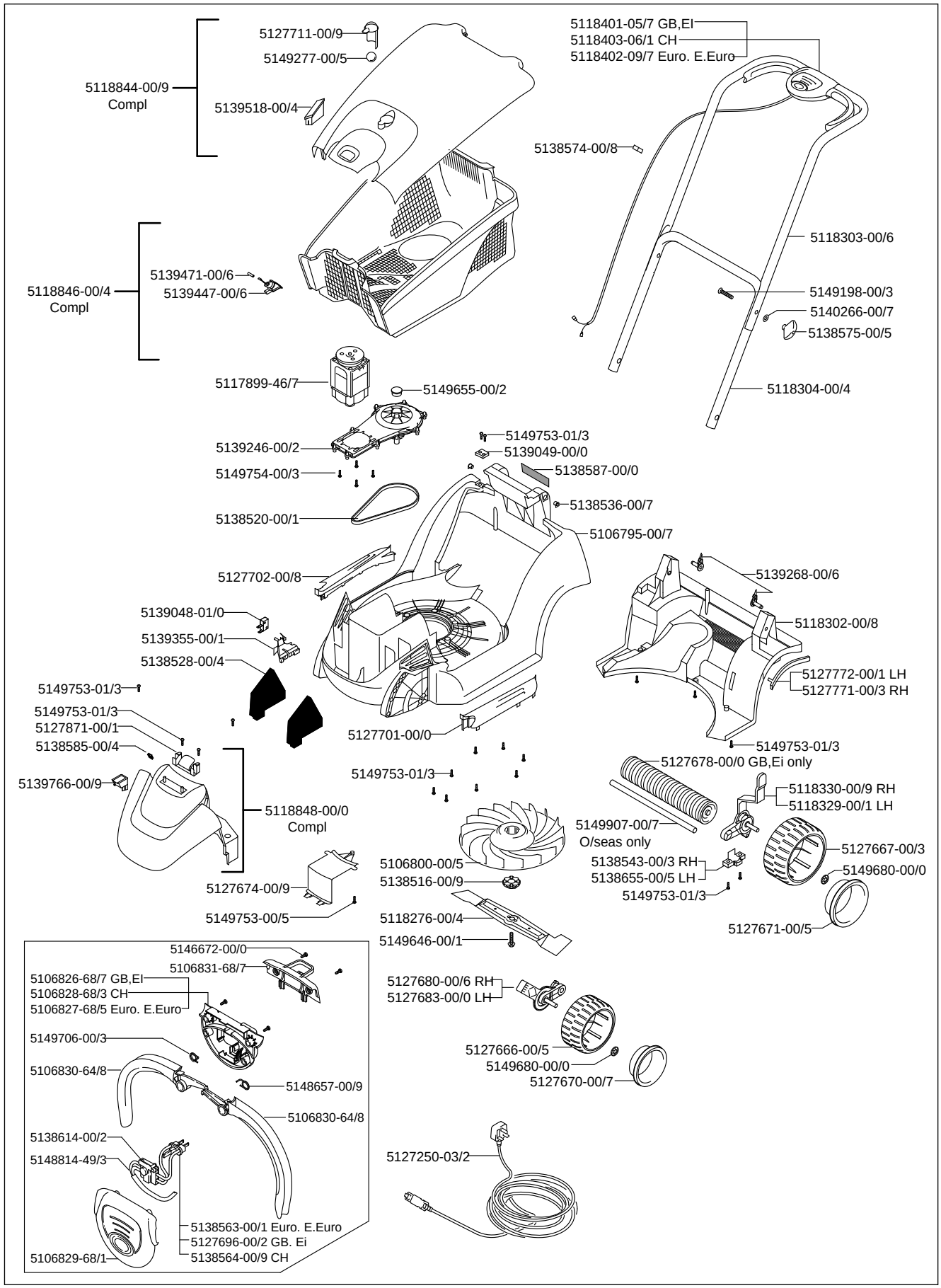

Electrolux

ELECTROLUX OUTDOOR PRODUCTS

PARTS 2000	8U
	P0005005

MODEL Power Compact 330

ILLUSTRATED PARTS LIST

9643302-01	9643302-22	9643302-67	9643302-86
UK	CH	E.Euro	Euro
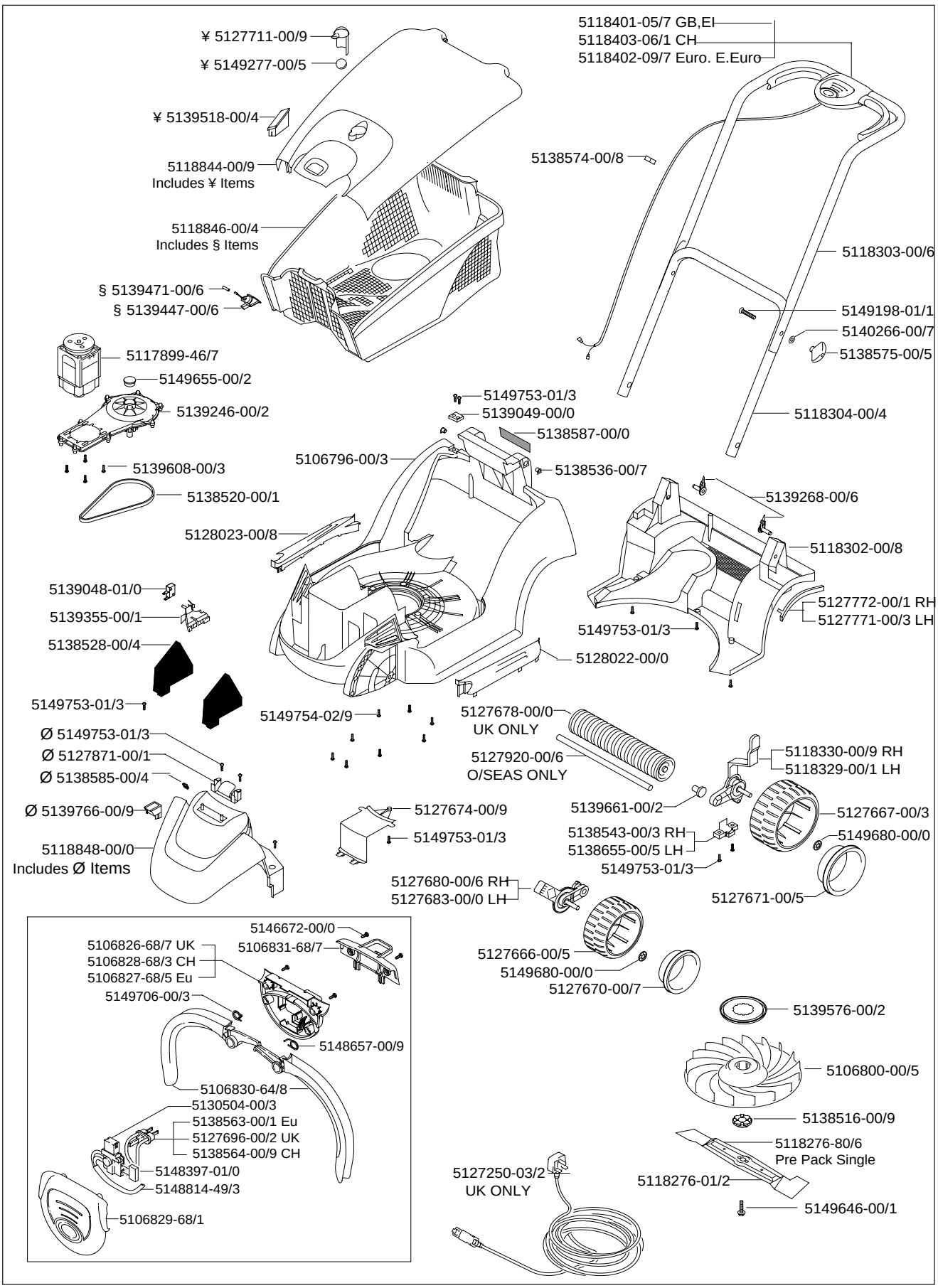
Products Ser. no. 91900366 Onwards