Electrolux

PARTS 2002	8u
	P0201020

ILLUSTRATED PARTS LIST

MODEL	Flymo RE 32
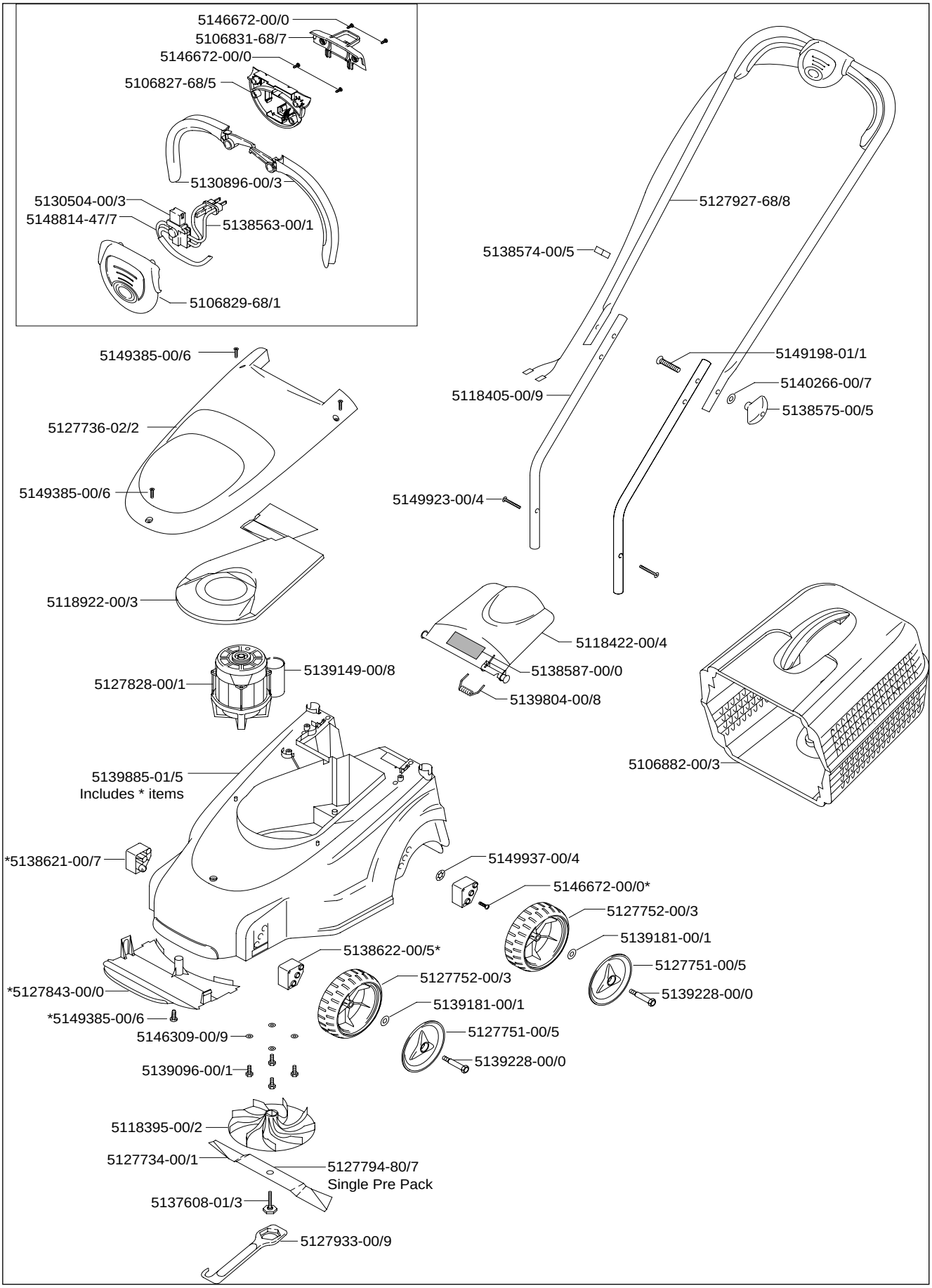
9643401-67 E.Euro
9643401-86 W.Euro