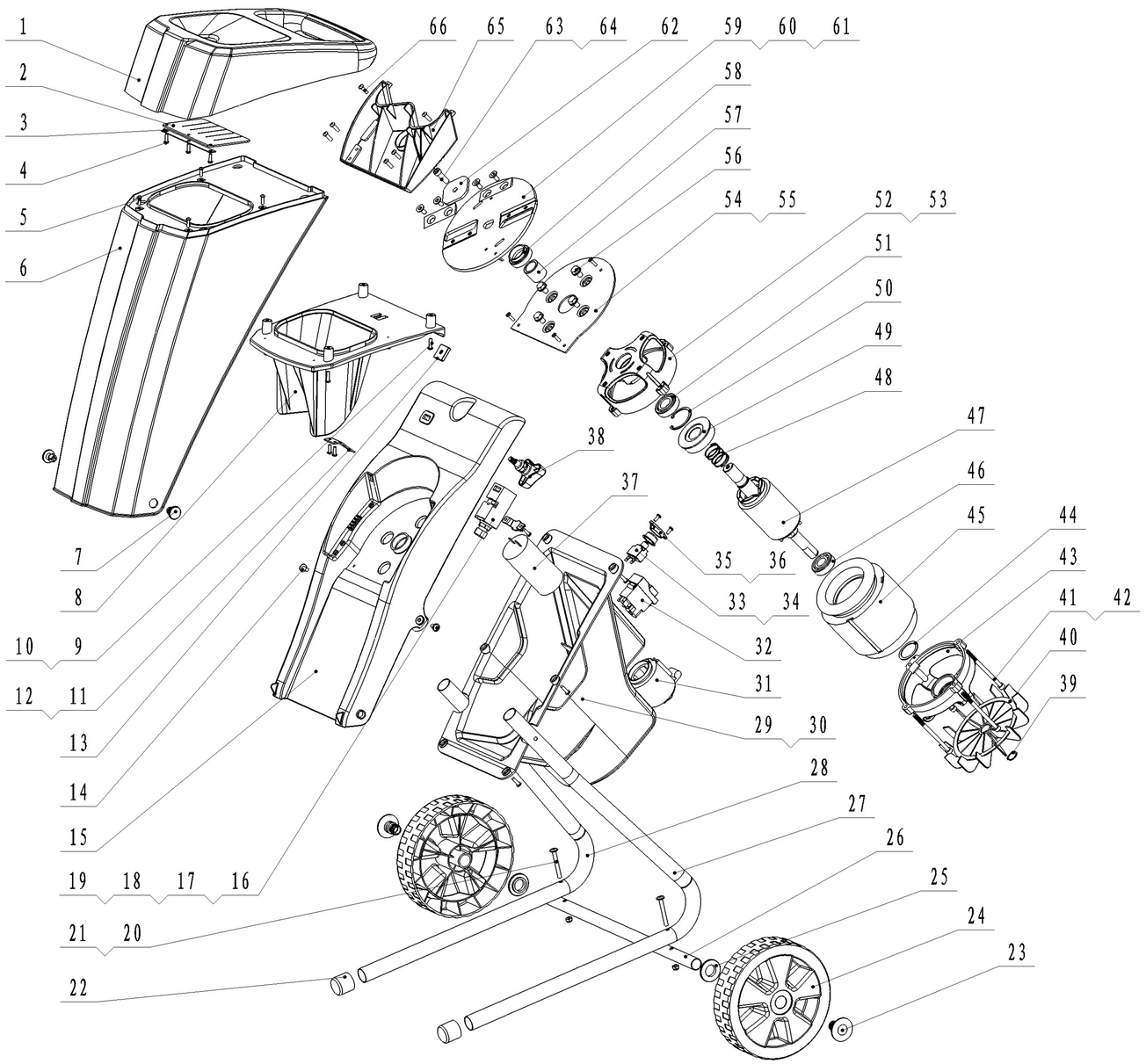

NO.	Name	Qty.
47	Rotor	1
46	Bearing	1
45	Stator with winding	1
44	Wave spring	1
43	End cover	1
42	Spring washe	4
41	Screw	4
40	Fan	1
39	Snap ring	1
38	Knob	1
37	Capacitor	1
36	"Y"screw	2
35	Pressure ring	1
34	Water proof sleeve	1
33	Over current protecter	1
32	Electromagnetic swich	1
31	Plug	1
30	"+"shape self tapping screw	6
29	Shell	1
28	Right support	1
27	Left support	1
26	Transverse shaft	1
25	Plastic shim	2
24	Wheel	2
23	Plastic rivet	2
22	Support foot	2
21	Self-locked nut	2
20	Hexagon bolt	2
19	"+"shape self tapping screw	2
18	Plastic board	1
17	Washer seal	1
16	Switch	1
15	Fixed base	1
14	Hexagon bolt	2
13	Quadrate nut	1
12	"+"shape self tapping screw	2
11	Key	1
10	Rubber stopper	2
9	"+"shape self tapping screw	4
8	Feeding inlet	1
7	Bolt	2
6	Cover handle	1
5	"+"shape self tapping screw	4
4	"+"shape self tapping screw	3
3	Bar washer	1
2	Profective washer	1
1	Feeding barre	1

66	"+"shape self tapping screw	6	
65	Retainer block	1	
64	Spring washe	1	
63	Hexangular tie bolt	1	
62	Knife plate washer	1	
61	Hexagon bolt	4	
60	Knife	2	
59	Knife plate	1	
58	Waterproof hat	1	

57	Bushing	1	
56	Hexagon flange locking screw	4	
55	"+"shape self tapping screw	3	
54	Fixed board	1	
53	Friction patch	3	
52	Front cover	1	
51	Bearing	1	
50	Elastic snap ring	1	
49	Brake plate	1	
48	Washe	1	

1:6

共 张 第 张

LSB2505

LZSHR2505

1	LZSHR2505-1
2	LZSHR2505-2
3	LZSHR2505-3
4	LZSHR2505-4
5	LZSHR2505-5
6	LZSHR2505-6
7	LZSHR2505-7
8	LZSHR2505-8
9	LZSHR2505-9
10	LZSHR2505-10
11	LZSHR2505-11
12	LZSHR2505-12
13	LZSHR2505-13
14	LZSHR2505-14
15	LZSHR2505-15
16	LZSHR2505-16
17	LZSHR2505-17
18	LZSHR2505-18
19	LZSHR2505-19
20	LZSHR2505-20
21	LZSHR2505-21
22	LZSHR2505-22
23	LZSHR2505-23
24	LZSHR2505-24
25	LZSHR2505-25
26	LZSHR2505-26
27	LZSHR2505-27
28	LZSHR2505-28
29	LZSHR2505-29
30	LZSHR2505-30
31	LZSHR2505-31
32	LZSHR2505-32
33	LZSHR2505-33
34	LZSHR2505-34
35	LZSHR2505-35
36	LZSHR2505-36
37	LZSHR2505-37
38	LZSHR2505-38
39	LZSHR2505-39
40	LZSHR2505-40
41	LZSHR2505-41
42	LZSHR2505-42
43	LZSHR2505-43
44	LZSHR2505-44

45	LZSHR2505-45
46	LZSHR2505-46
47	LZSHR2505-47
48	LZSHR2505-48
49	LZSHR2505-49
50	LZSHR2505-50
51	LZSHR2505-51
52	LZSHR2505-52
53	LZSHR2505-53
54	LZSHR2505-54
55	LZSHR2505-55
56	LZSHR2505-56
57	LZSHR2505-57
58	LZSHR2505-58
59	LZSHR2505-59
60	LZSHR2505-60
61	LZSHR2505-61
62	LZSHR2505-62
63	LZSHR2505-63
64	LZSHR2505-64
65	LZSHR2505-65

LZSHR2505-67 = MOTOT CPL