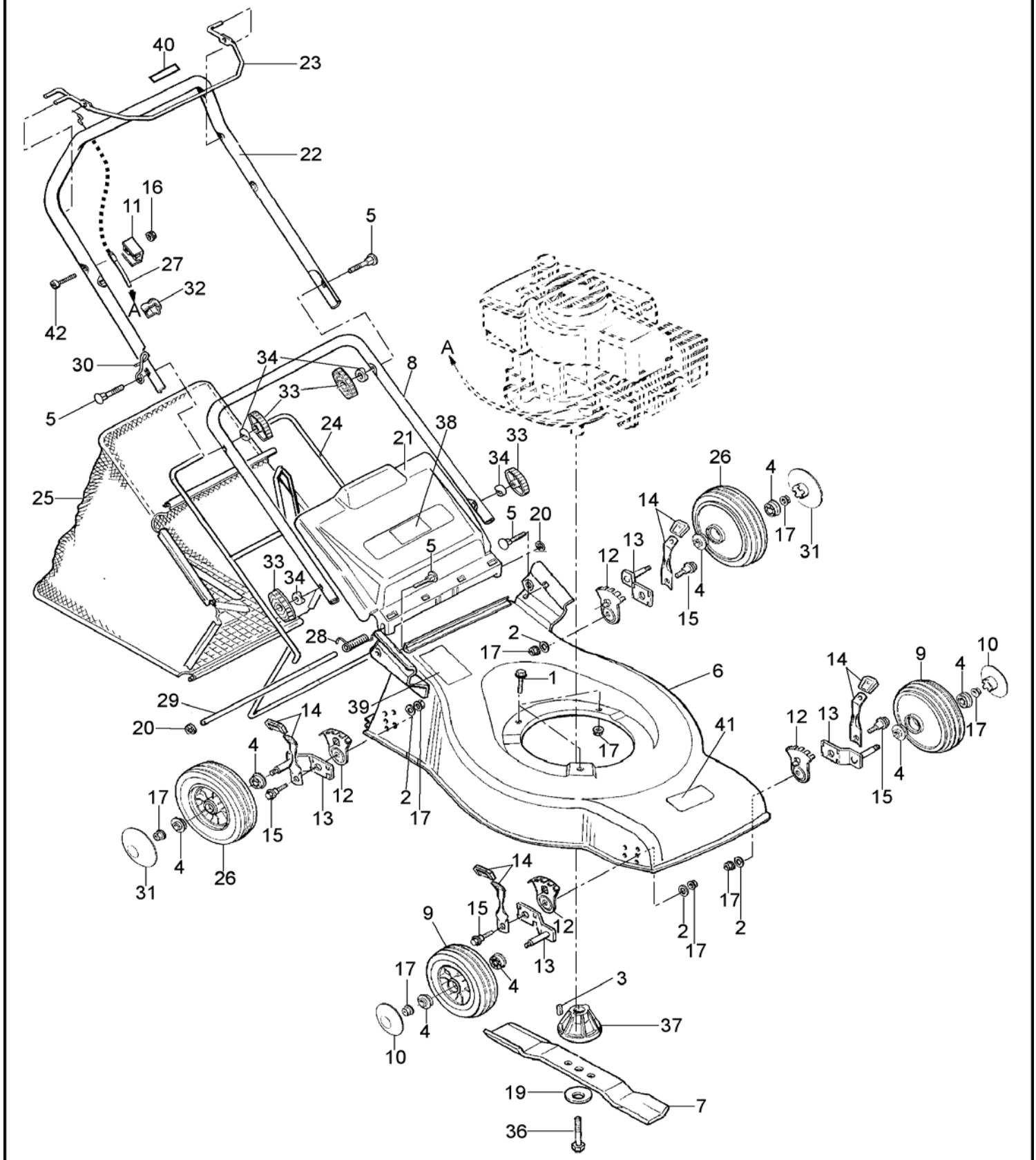
40
23
22
16
11
5
27
32
A
42
30
34
8
33
5
24
38
21
33
34
26
4
25
14
5
20
17
31
13
12
5
33
34
4
15
28
2
17
1
6
14
9
10
29
39
4
17
20
14
41
12
13
17
4
12
2
17
15
13
17
15
4
26
31
14
17
2
9
15
12
2
17
13
17
4
3
4
37
10
19
7
36

MA.RI.NA. SP 41

POS.	CODICE	I	F	D	GB	E	QTA'
1	CP030830	VITE TE	VIS	SCHRAUBE	SCREW	TORNILLO	3
2	CP032909	RONDELLA	RONDELLE	SCHEIBE	WASHER	ARANDELA	4
3	CP037406	CHIAVETTA	CLAVETTE	SCHLÜSSELCHEN	WOODRUFF KEY	CHAVETA	1
4	CP040226	BOCCOLA	BOUCLE	BÜCHSE	BUSH	COJINETE	8
5	CP040850	VITE TTQST	VIS	SCHRAUBE	SCREW	TORNILLO	4
6	CP041002.12	CHASSIS TURCHESE	CARTER	GEHÄUSE	DECK	CHASIS	1
7	CP041013	LAMA	LAME	MESSER	BLADE	CUCHILLA	1
8	CP047034	MANICO INF.	GUIDON	STIEL	HANDLE	MANILLAR	1
9	CP042109	RUOTA 150	ROUE	RAD	WHEEL	RUEDA	2
10	CP042127	COPRIRUOTA 150	CACHE MOYEU	RADDECKUNG	HUB CAP	TAPA RUEDA	2 (>= 04/2004)
10	CP042128	COPRIRUOTA 150	CACHE MOYEU	RADDECKUNG	HUB CAP	TAPA RUEDA	2 (< 04/2004)
11	CP042216	BLOCCHETTO CAVO FR	ATTACHE CABLE FREIN	KABELBESCHWERER	CLIP	FIJADOR CABLE	1
12	CP042245	SETTORE	SECTEUR	PLATTE	SECTOR	PLACA ALTURAS	4
13	CP042248	SUPPORTO	SUPPORT	ACHSELAGER	SUPPORT	SOPORTE	4
14	CP042250	LEVA ALZO	LEVIER	STANGE	LEVER	LEVA ALTURAS	4
15	CP042268	VITE	VIS	SCHRAUBE	SCREW	TORNILLO	4
16	CP042806	DADO	ÉCROU	MUTTER	KNOB	ESPARRAGO	1
17	CP042808	DADO	ÉCROU	MUTTER	KNOB	ESPARRAGO	11
19	CP045911	MOLLA A TAZZA	RONDELLE	SCHEIBE	WASHER	MUELLE	1
20	CP046607	RITEGNO	CLIP	RÜCKHALT	RETAINER	ANILLO CLIP	2
21	CP047018	PARASASSI	DEFLECTEUR	DEFLEKTOR	REAR DOOR	DEFLECTÓR	1
22	CP047042	MANICO SUP.	GUIDON	STIEL	HANDLE	MANILLAR	1
23	CP047071	LEVA FRENO	LEVIER FREIN	STANGE	LEVER	LEVA	1
24	CP047078	TELAIO CESTO	ATTELAGE	GRASFANGRAHMEN	FRAME	ARMAZON SACO	1
25	CP047083.05	TELA CESTO NERA	SAC RAMASSEUR	GRASFANGSACK	GRASS BAG	SACO TELA	1
26	CP047109	RUOTA 180	ROUE	RAD	WHEEL	RUEDA	2
27	?-TAB-FR	CAVO FRENO	CABLE FREIN	KABEL	CABLE	CABLE	1
28	CP050192	MOLLA PARASASSI	RESSORT	FEDER	SPRING	MUELLE	1
29	CP047203	ASTINA	AXE PIVOT	STANGE	HINGE PIN	EJE DEFLECTÓR	1
30	CP047242	GANCIO FUNE AVV.	PORTE CABLE	KABELHALTER	CABLE SUPPORT	FIJADOR CABLE	1
31	CP050127	COPRIRUOTA 180	CACHE MOYEU	RADDECKUNG	HUB CAP	TAPA RUEDA	2 (>= 04/2004)
31	CP050128	COPRIRUOTA 180	CACHE MOYEU	RADDECKUNG	HUB CAP	TAPA RUEDA	2 (< 04/2004)
32	CP050222	FERMACAVO	ATTACHE CABLE	KABELBESCHWERER	CLIP	FIJADOR CABLE	1
33	CP050228	POMOLO MANICO	ÉCROU	GRIFF	KNOB HANDLE	POMO MANILLAR	4
34	CP050230	RONDELLA	RONDELLE	SCHEIBE	WASHER	ARANDELA	4
36	CP050957	VITE LAMA	VIS	SCHRAUBE	SCREW	TORNILLO	1
37	CP053273	MOZZO LAMA 22	PORTE LAME	MESSERHALTER	BLADE ADAPTOR	PORTA CUCHILLA	1
38	CP053715	DECALCO	DECALQUE	ETIKETTE	DECAL	CARTEL	1
39	CP053813	DECALCO	DECALQUE	ETIKETTE	DECAL	CARTEL	1
40	CP053842	DECALCO	DECALQUE	ETIKETTE	DECAL	CARTEL	1
41	CP053862	DECALCO SPARTAN	DECALQUE	ETIKETTE	DECAL	CARTEL	1
42	CP060640	VITE TC	VIS	SCHRAUBE	SCREW	TORNILLO	1