Murray MODEL G53002X68

COD.	MOD.	*	**	✧	✪	△	✇					
503208	5420 XST	110050414	200054900(2)	200013800(2)	200020715(2)	070053400(2)	———					
503214	5530022X68	110050410	200054900(2)	200013800(2)	200020715(2)	200059215(2)	———					
503216	5420 XST	110050414	200054900(2)	200013800(2)	200020716(2)	070053400(2)	———					

5420 XST
5420 XQT
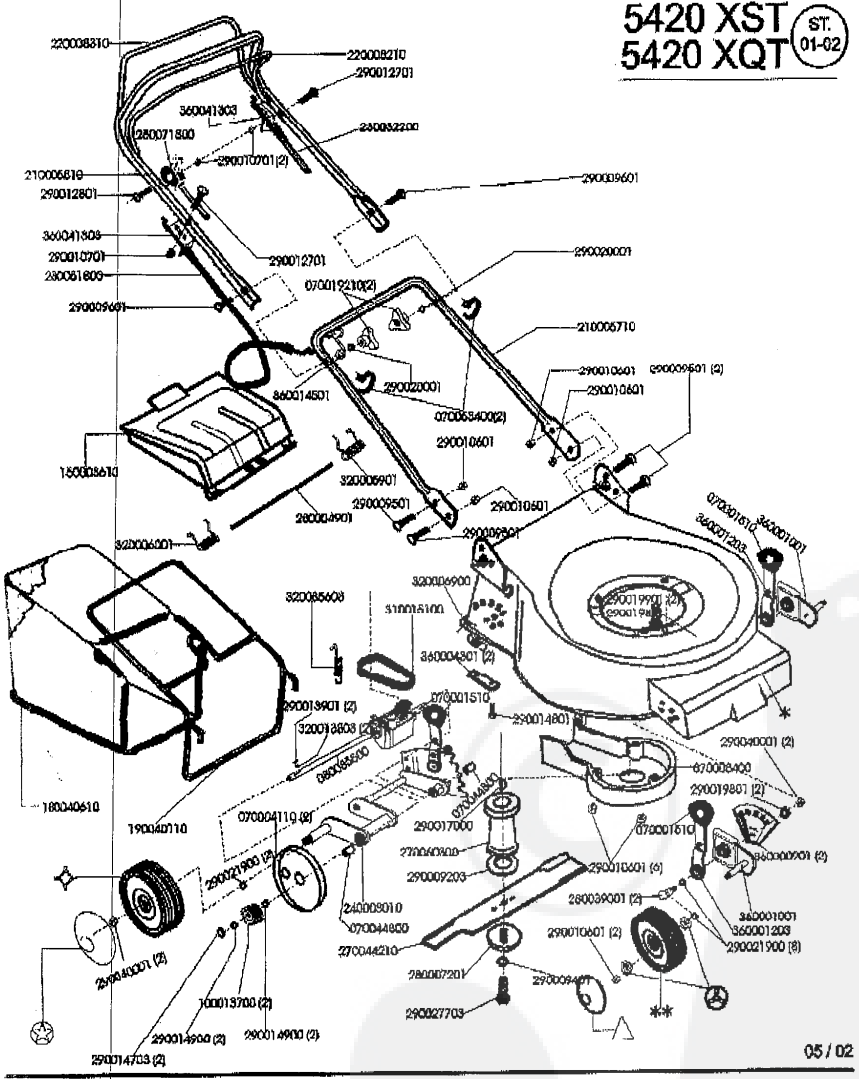
ST. 01-02