McCULLOCH®

PARTNER

ILLUSTRATED PARTS LIST

TIVOLI 45-60 EUROMAC H60 PARTNER PH25

SERIAL NUMBER PREFIX 06

CE

June 2002

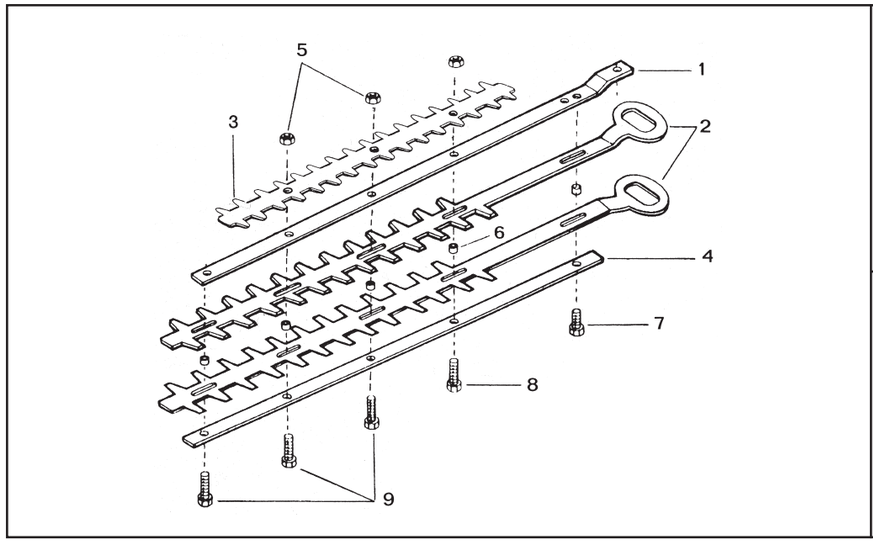

TIVOLI 45

		PN McC	PN ELX		
	1	229912	538229912		2
C	2	227727	538227727		2
	3	241012	538241012		1
	4	229756	538229756		1
B	5	229208	538229208		2
B	6	227769	538227769		4
B	7	229563	538229563	M5x10	1
B	8	229959	538229959	M5x20	1
B	9	229561	538229561	M5x16	2

TIVOLI 60 - H 60 - PH25

		PN McC	PN ELX		
	1	229913	538229913		1
C	2	227726	538227726		2
	3	241012	538241012		1
	4	229754	538229754		1
B	5	229208	538229208		3
B	6	227769	538227769		5
B	7	229563	538229563	M5x10	1
B	8	229959	538229959	M5x20	1
B	9	229561	538229561	M5x16	3

FIGURE 3

WALBRO WT 547

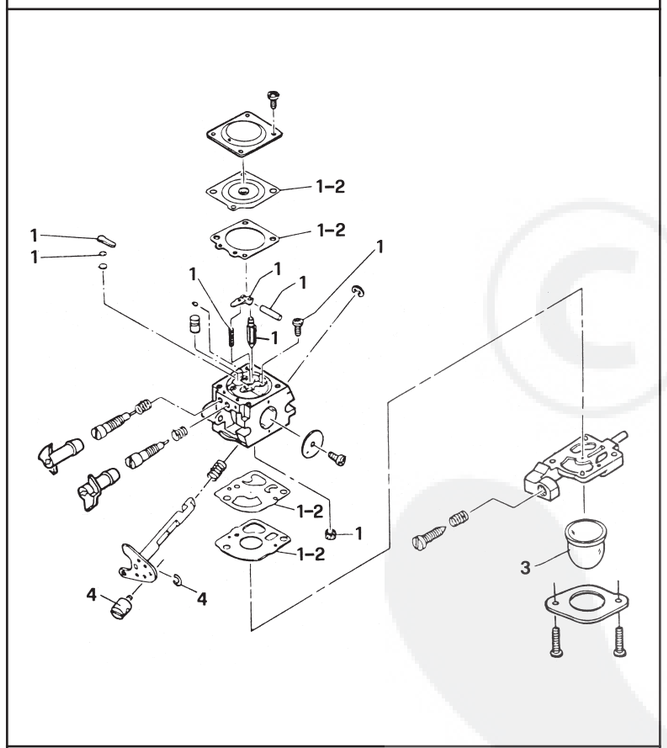

			PN McC	PN ELX	
C	–		241601	538241601	carbur.
B	1	•	324013	538324013	1
A	2	••	324009	538324009	1
C	3	•	225834	538225834	1
	4	•	224466	538224466	1

ZAMA C1Q M38

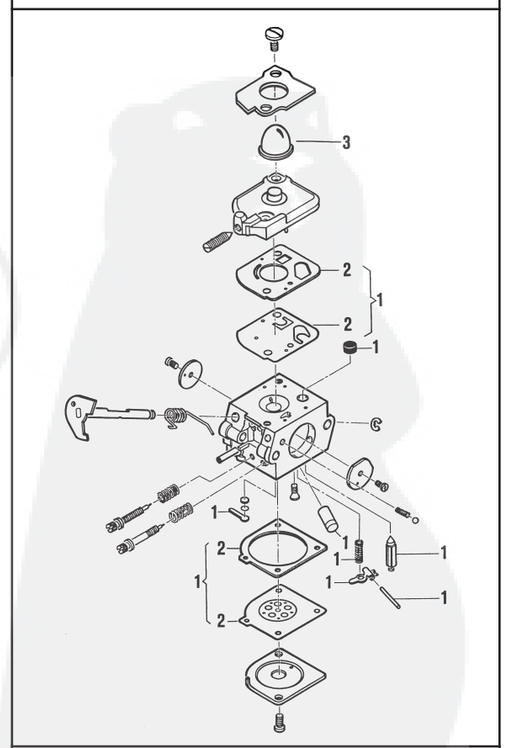

			PN McC	PN ELX	
C	-		241824	538241824	carbur.
B	1	•	300465	538300465	1
A	2	••	300473	538300473	1
C	3	•	246946	538246946	1

FIGURE 4

A = high moving - alta rotazione - haute demande - große Nachfrage
B = medium moving - media rotazione - moyenne demande - mittelmäßige Nachfrage
C = slow moving - bassa rotazione - basse demande - wenige Nachfrage

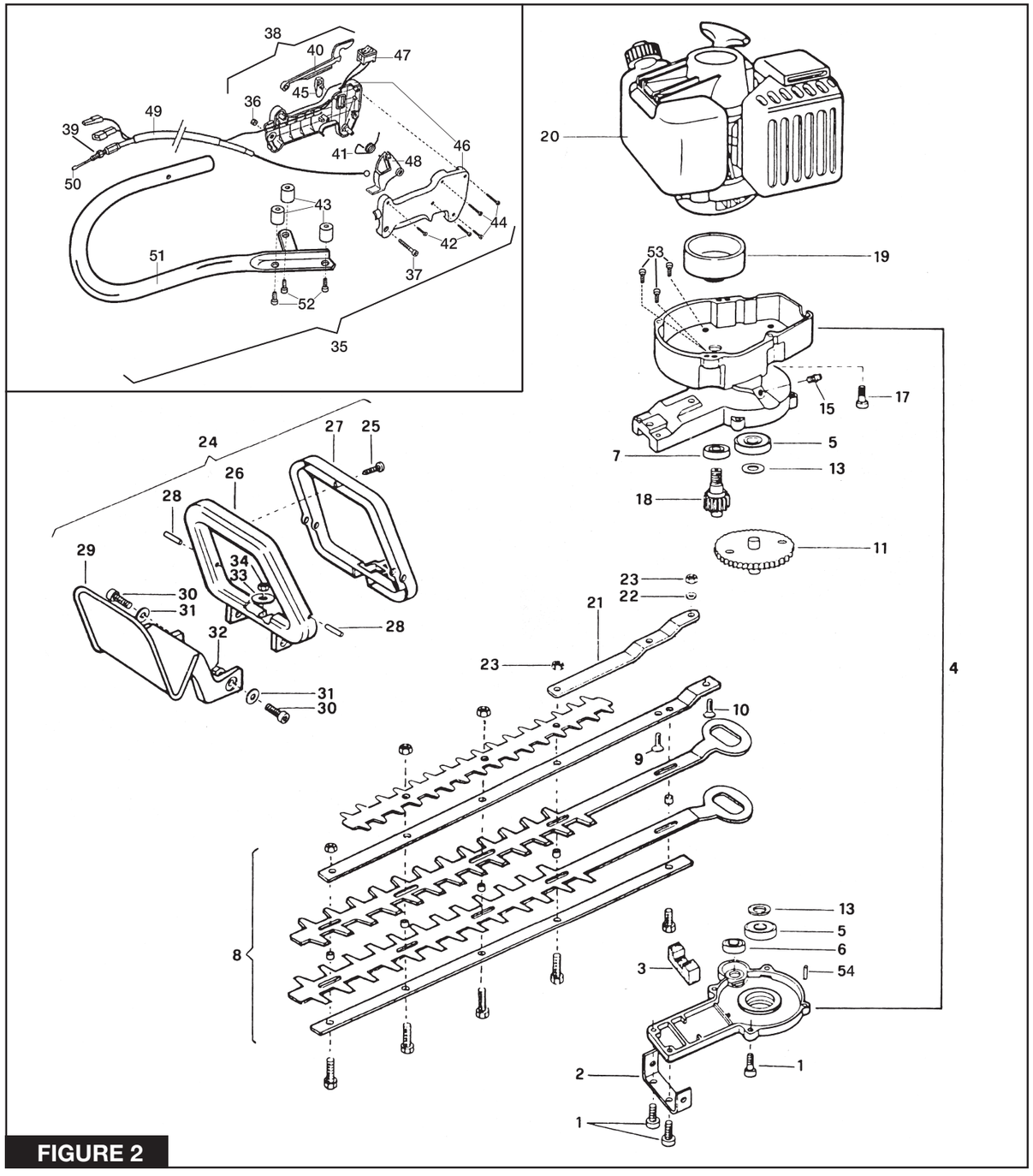

FIGURE 2

	PN McC	PN ELX		
1	229077	538229077	M5x18	6
2	229910	538229910		1
C 3	229970	538229970		1
4	248113	538248113		1
5	● 228958	538228958		2
6	● 235914	538235914		1
7	● 235897	538235897		1
8	FIGURE 3			
9	228924	538228924	M5x20	1
10	229972	538229972	M5x25	1
C11	229919	538229919		1
13	235164	538235169		2
15	228861	538228861		1
17	235801	538235801	M4x16	4

	PN McC	PN ELX		
18	229914	538229914		1
C19	242142	538242142		1
20	FIGURE 1			
21	229911	538229911		1
22	236529	538236529		1
23	229208	538229208		2
24	225627	538225627		1
25	● 227251	538227251		1
26	● 229761	538229761		1
27	● 229762	538229762		1
28	● 229772	538229772		2
29	229760	538229760		1
30	235214	538235214	M6x20	2
31	236936	538236936		2

	PN McC	PN ELX		
32	235912	538235912		2
33	235107	538235107		1
34	229208	538229208		1
35	242409	538242409		1
36	● 235216	538235216		1
37	● 235804	538235804		1
38	●● 242404	538242404		1
39	●● 229207	538229207		1
40	●● 229820	538229820		1
41	●● 240091	538240091		1
42	●● 240618	538240638		2
C43	●● 235987	538235987		3
44	●● 240833	538240833		3
45	●● 241292	538241292		1

	PN McC	PN ELX		
46	●● 241293	538241293		1
C47	●● 241294	538241294		1
48	●● 241295	538241295		1
C49	●● 242405	538242405		1
C50	● 242408	538242408		1
51	● 242403	538242403		1
52	● 236512	538236512		3
53	● 235911	538235911		3
54	● 236365	538236365		2

A = high moving - alta rotazione - haute demande - große Nachfrage B = medium moving - media rotazione - moyenne demande - mittelmäßige Nachfrage C = slow moving - bassa rotazione - basse demande - wenige Nachfrage

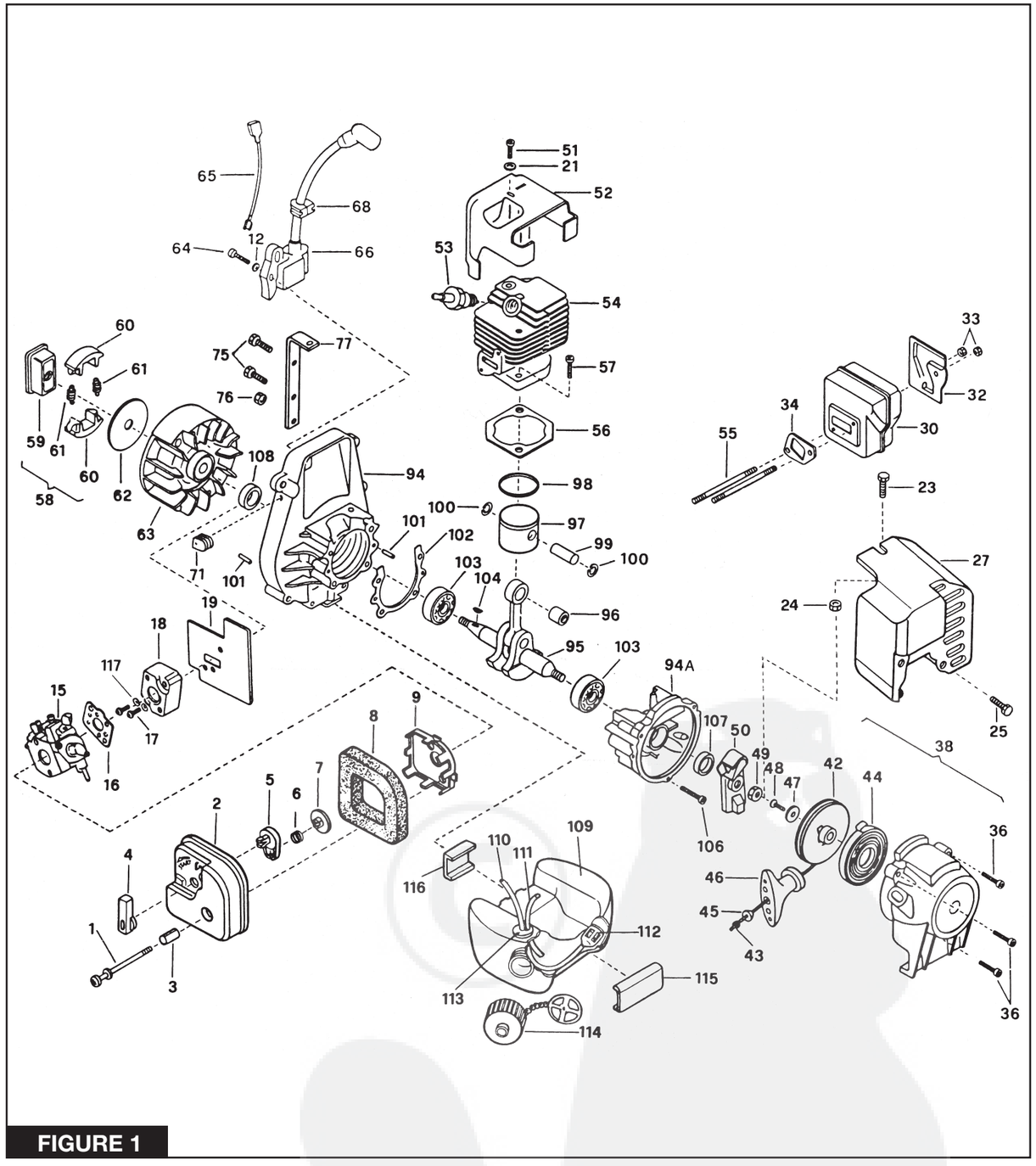

FIGURE 1

	PN McC	PN ELX		
1	227274	538227274	M5x60	2
C 2	241677	538241677		1
3	241705	538241705		2
4	235819	538235819		1
5	235820	538235820		1
6	235822	538235822		1
7	241602	538241602		1
B 8	241640	538241640		1
9	241704	538241704		1
12	235248	538235248		2
C 15	FIGURE 4			
A 16	241600	538241600		1
17	235806	538235806	M5x20	2
C 18	241750	538241750		1
B 19	241643	538241643		1
21	235248	538235248		1
23	241976	538241976	M4x12	1

	PN McC	PN ELX		
24	235431	538235431		1
25	241976	538241976	M4x12	1
27	229103	538229103		1
26	235612	538235612		3
30	242131	538242131		1
C 34	241799	538241799		1
33	235642	538235642		2
36	241963	538241963	M4x22	3
C 38	241614	538241614		1
B 42	● 241620	538241620		1
A 43	● 241746	538241746		1
B 44	● 241619	538241619		1
45	● 235612	538235612		1
46	241778	538241778		1
47	● 241703	538241703		1
48	● 300294	538300294		1
49	241624	538241624		1

	PN McC	PN ELX		
50	241784	538241784		1
51	236381	538236381	M5x10	1
52	241757	538241757		1
A 53	92879	538092879		1
C 54	302000	538302000		1
55	241804	538241804		2
B 56	241598	538241598		1
57	236933	538236933	M6x18	2
B 58	241792	538241792		1
59	● 241789	538241789		1
60	● 241790	538241790		2
A 61	● 241794	538241794		2
62	241604	538241604		1
63	241796	538241796		1
64	235806	538235806	M5x20	2
65	241606	538241606		1
C 66	241749	538241749		1

	PN McC	PN ELX		
68	236322	538236322		1
71	241607	538241607		1
75	241976	538241976	M4x12	2
76	235431	538235431		1
77	228884	538228884		1
94	241720	538241720		1
94A	241748	538241748		1
95	241805	538241805		1
C 96	● 235742	538235742		1
C 97	248177	538248177		1
B 98	● 240002	538240002		1
99	● 241735	538241735		1
100	● 235008	538235008		2
101	241597	538241597		4
102	241595	538241595		1
103	241594	538241594		2
C104	227631	538227631		1

	PN McC	PN ELX		
106	235804	538235804	M5x30	4
C107	241596	538241596		1
C108	241596	538241596		1
C109	241106	538241106		1
B110	● 229132	538229132		1
B111	229743	538229743		1
A112	● 93720	538093720		1
C113	● 235675	538235675		1
B114	223508	538223508		1
115	241611	538241611		1
116	241612	538241612		1
117	235248	538235248		2

A = high moving - alta rotazione - haute demande - große Nachfrage B = medium moving - media rotazione - moyenne demande - mittelmäßige Nachfrage C = slow moving - bassa rotazione - basse demande - wenige Nachfrage