SANDRI GARDEN

ILLUSTRATED PARTS LIST

GARDEN IDEA

GREEN IDEA 45 ALL

MP 45 AL

serie 02

POS.	CODICE		Q.TA
1	3006960	YELLOW	1
	3010580	RED	1
	3012270	ORANGE	1
2	4006800		2
3	142030		4
4	203680		4
5	3006790		2
6	245240		5
7	145250		4
8	150770		2
9	403440		1
10	147470		3
11	303390		1
12	140260		3
13	305750		2
14	4006900		4
15	304060		4
16	204080		4
17	304161		4
18	305740		2
19	167820		4
20	106320		4
21	101370		1
22	203290		1
23	200550		1
24	302080		1
25	301280		1
26	144400		1
27	348210		1
28	104050		4
29	296580		1
30	2007470		1
31	396640		1
32	144460		4
33	2007500		2
34	2007510		2
35	243090		4
37	245240		2
57	4006690		1
58	4006720		1
59	2008490		4

POS.	CODICE		Q.TA
61	340060		4
62	142480		2
66	181690		2
67	184960		2
68	4006940		1
69	446340		2
70	350910		1
71	161060		1
73	101740		2
74	2007080		1
75	245930	**B&S**	1
	285690	**Quantum**	1
	240690	**TM/Honda**	1
76	3002560		1
78	301110		1
79	140300		1
80	140310		1
81	295640		1
82	142000		1
83	446320		1
84	446310		1
85	1010170		2
86	147740		2
87	4006730		1
88	442060		1
93	106440		2
97	2007620	**B&S/Honda**	1
	2009980	**B&S Quantum**	1
		B&S Intek	1
		Honda GXV140	1
	2007290	**TM**	1
98	184950		6
99	385390		1
101	2007120		1
107	647880		1
108	690720		1
110	673450		1
OPTIONAL			
111	273660		1
112	373610		1

POS.	CODICE	Q.TA

6007520/121

SANDRI GARDEN

GREEN IDEA 45 ALL
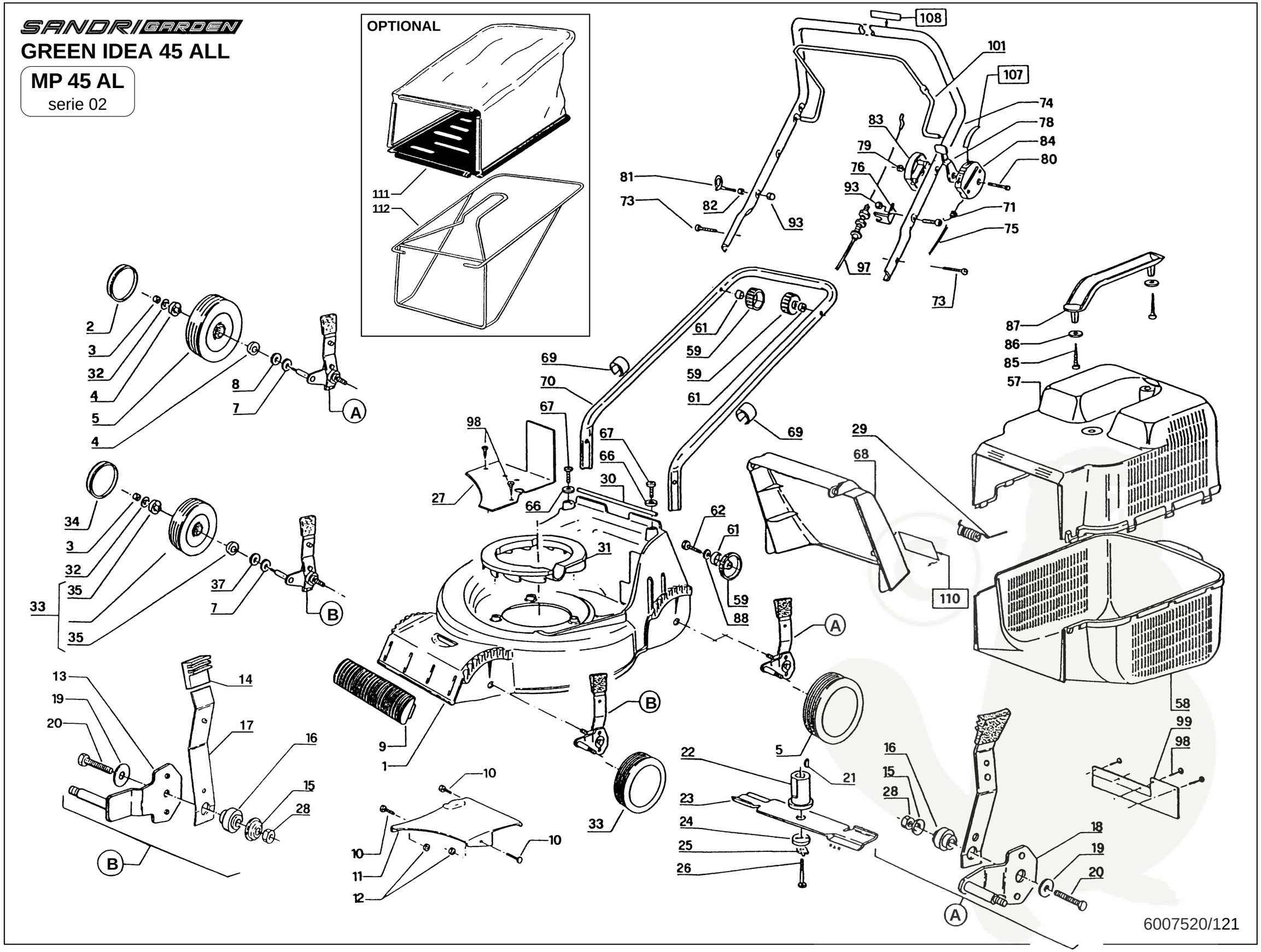
MP 45 AL
serie 02