SANDRI GARDEN

ILLUSTRATED PARTS LIST

GARDEN IDEA

GREEN IDEA 41E

GI 41 E
serie 05

POS.	CODICE		Q.TA
1	459780		1
2	273840		1
3	495770		1
4	400440		4
5	159270		3
6	144450		9
7	301010	YELLOW	1
	301100	RED	1
	301180	BLUE	1
	3015160	GREEN	1
8	160790		2
9	144460		19
10	400770		4
11	142030		5
12	356740		1
13	459710		4
14	245240		4
15	145250		4
16	3006880		4
17	3006890		4
18	2006910		4
19	362220		4
20	172960		4
21	459720		1
22	184460		2
23	164010		2
24	296580		1
25	343550		1
26	145900		2
27	152560		4
28	145480		5
29	247180		1
30	147480		1
31	247600		1
33	473650		1
34	459590		1
35	200450		1
36	140510		3
37	459600		1
38	474540		1
41	340060		4
42	346380		4

POS.	CODICE		Q.TA
43	446340		1
44	101740		2
45	409570		1
46	207200	SCHUCKO	1
47	140080		2
48	446330		1
49	342970		1
50	485520		1
51	495490		1
52	147790		2
53	184540		2
54	456750		2
55	456760		2
56	4006900		4
57	673460		1
OPTIONAL			
58	259760		1
59	3017400		1
ALTERNATIVE WITH BALL BEARINGS			
10	274070		4
13	2008050		4

SANDRI GARDEN

GREEN IDEA 41 E

GI 41 E
serie 05

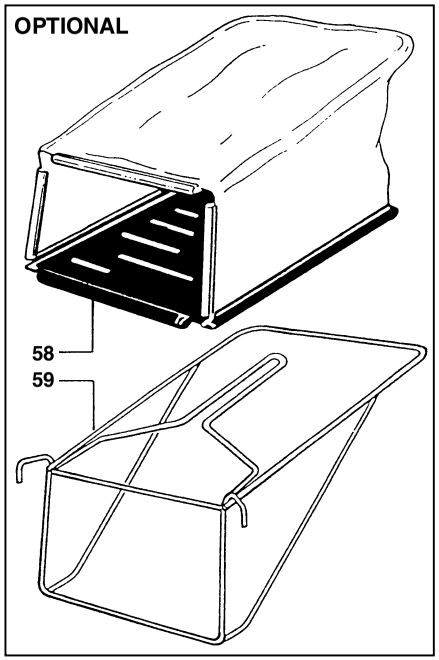

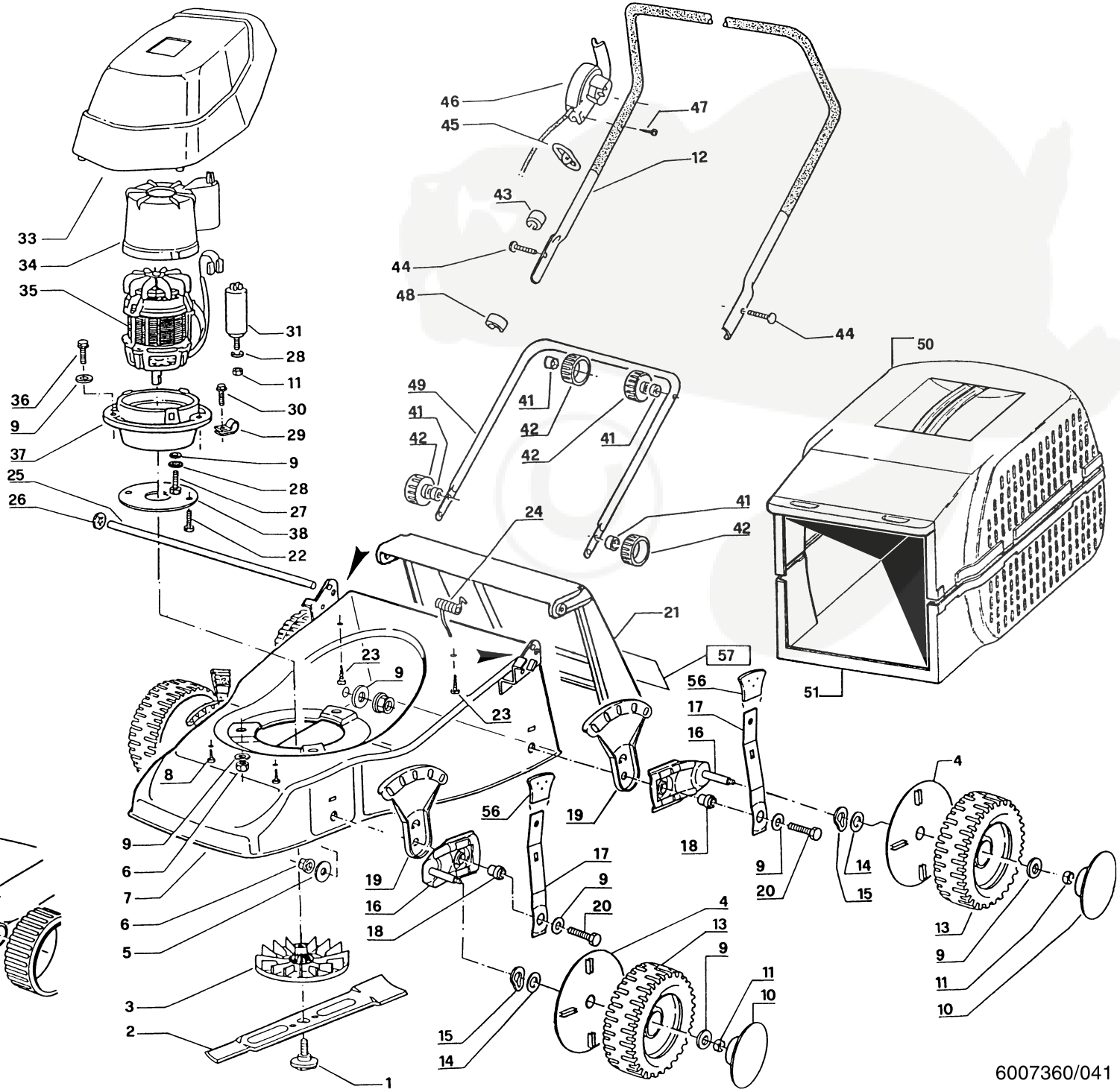

6007360/041