SANDRI GARDEN

ILLUSTRATED PARTS LIST

GARDEN IDEA

GREEN IDEA 51

SG 51
serie 01

POS.	CODICE		Q.TA
1	101790		1
2	301280		1
3	302080		1
4	2007310		1
5	201380		1
6	101370		1
7	4006800		4
8	142030		4
9	144460		9
10	4006840		8
11	3006790		4
12	245240		4
13	145250		4
14	3006890		4
15	4006900		4
16	2006910		4
17	3006880		4
18	362220		4
19	159270		3
20	144450		4
21	3006740	YELLOW	1
	3012070	RED	1
	3002300	ORANGE	1
	3011920	BLUE	1
22	459720		1
23	145900		2
24	343550		1
25	346380		4
26	340060		4
27	342970		1
28	145910		2
29	101740		2
30	446330		2
31	161060		1
32	240220	B&S QUATTRO	1
	245930	B&S QUANTUM	1
	240690	TECUMSEH	1
	240690	HO GCV	1
	240500	B&S CLASSIC	1
33	2009980	B&S QUANTUM	1
	2007620	B&S	1
	2007290	TECUMSEH	1
	2007620	HO GCV	1

POS.	CODICE	Q.TA
34	106440	2
35	142000	1
36	295640	1
37	3002560	1
38	140300	1
39	446320	1
40	2007080	1
41	2007120	1
42	301110	1
43	446310	1
44	140310	1
45	4006680	1
46	4006710	1
47	296580	1
48	172960	4
49	4006730	1
50	1010170	2
51	147740	2
52	690720	1
53	647880	1
54	673450	1
OPTIONAL		
55	2008330	1
56	2008320	1

POS.	CODICE	Q.TA

SANDRI GARDEN

GREEN IDEA 51

SG 51
serie 01

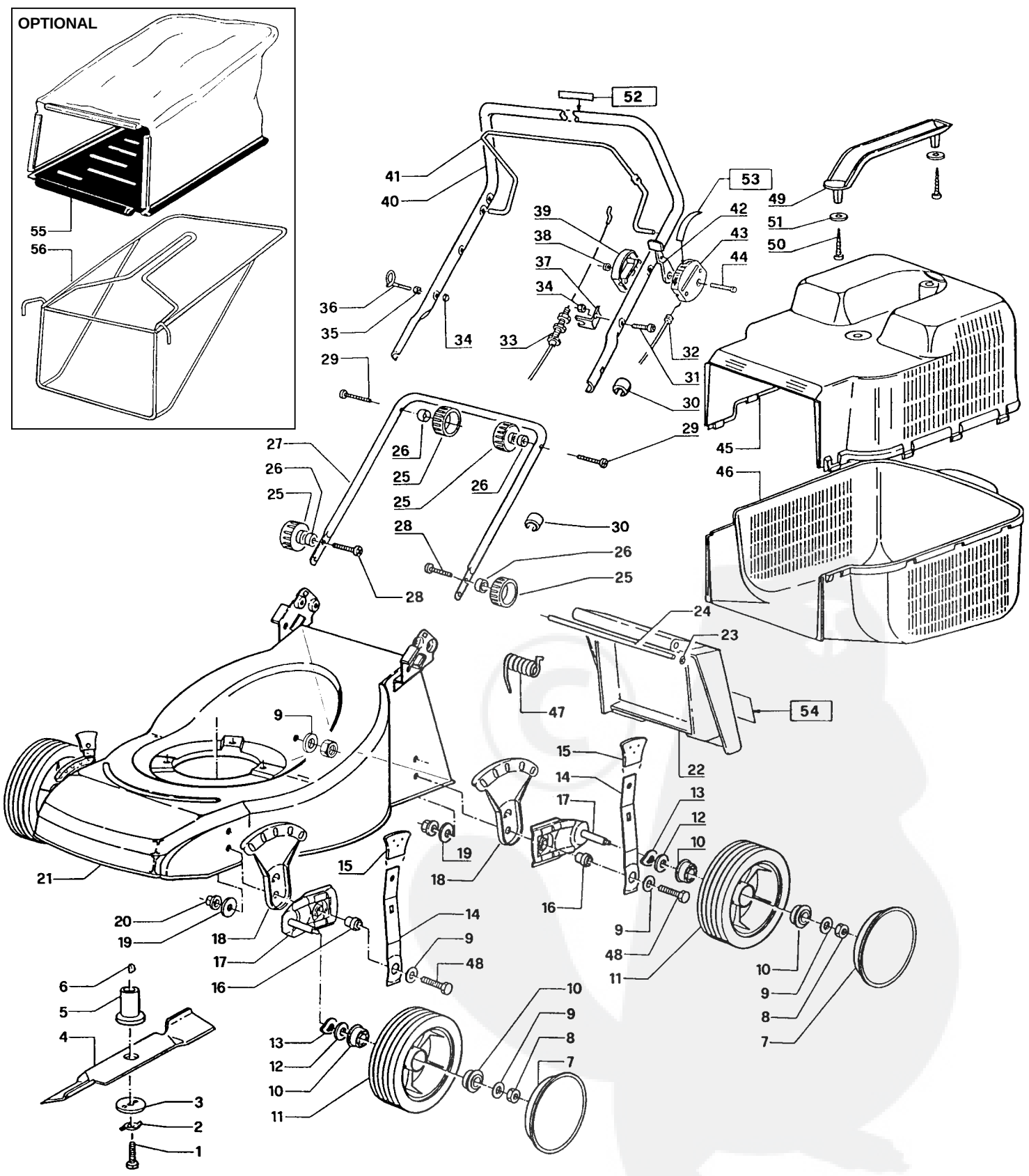

6007300/090