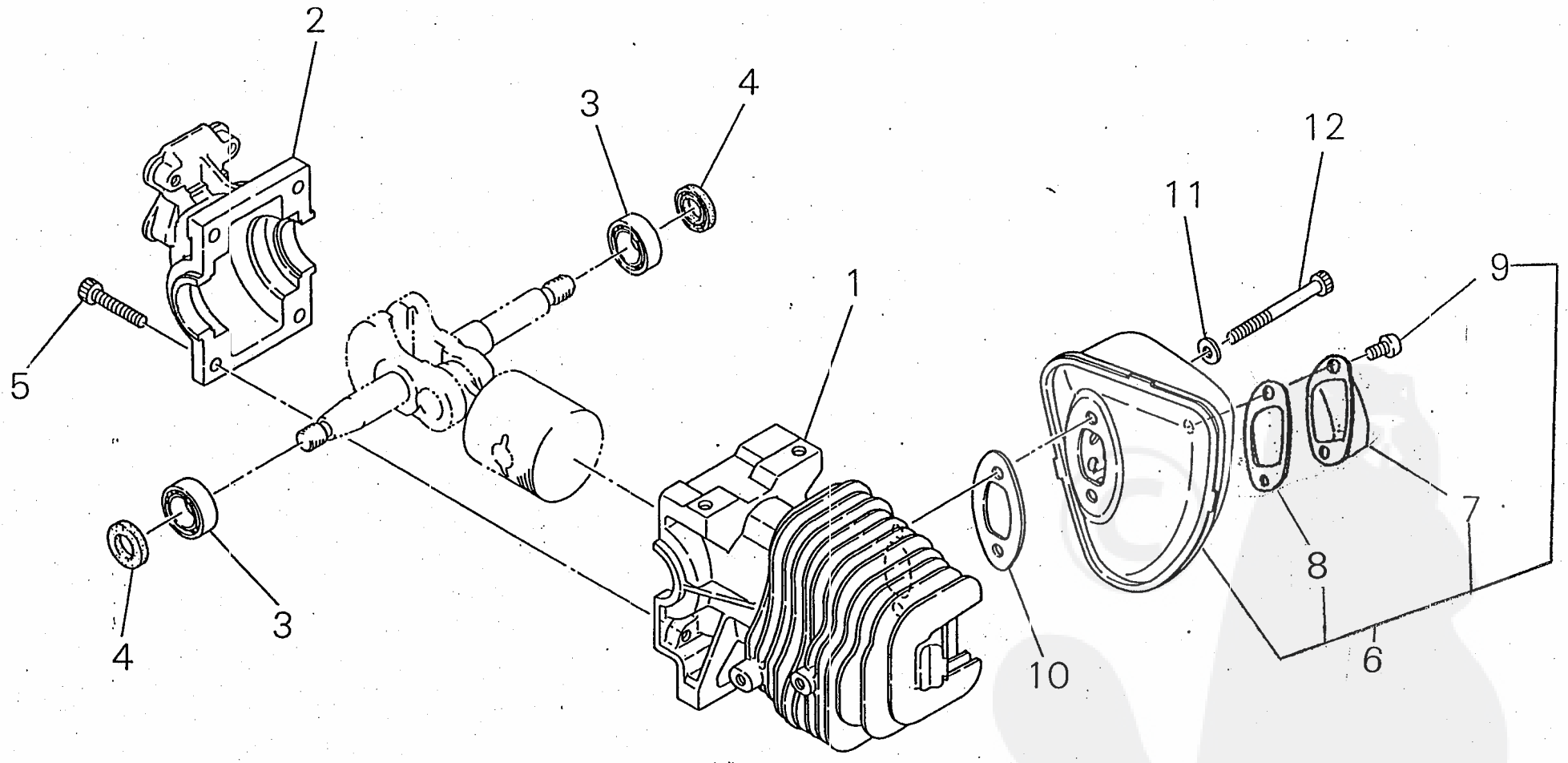
2
3
4
12
11
9
1
5
7
8
4
3
10
6

PRICE:(¥)

Ref. No	Part No.	Part Name	Q'ty	emarks
1- 1	72320-12111	CYLINDER	1	
2	72320-12211	CRANK CASE	1	
3	12900-62010	BEARING	2	
4	20000-21211	OIL SEAL	2	
5	01020-05200	BOLT	4	
6	72321-15101	MUFFLER SUB ASSY	1	
7	72321-15140	• TAIL PLATE	1	
8	72321-15150	• GASKET	1	
9	11203-04060	• SCREW PM	2	
10	22115-15210	GASKET MUFFLER	1	
11	22100-31210	WASHER	2	
12	01020-05550	BOLT	2	

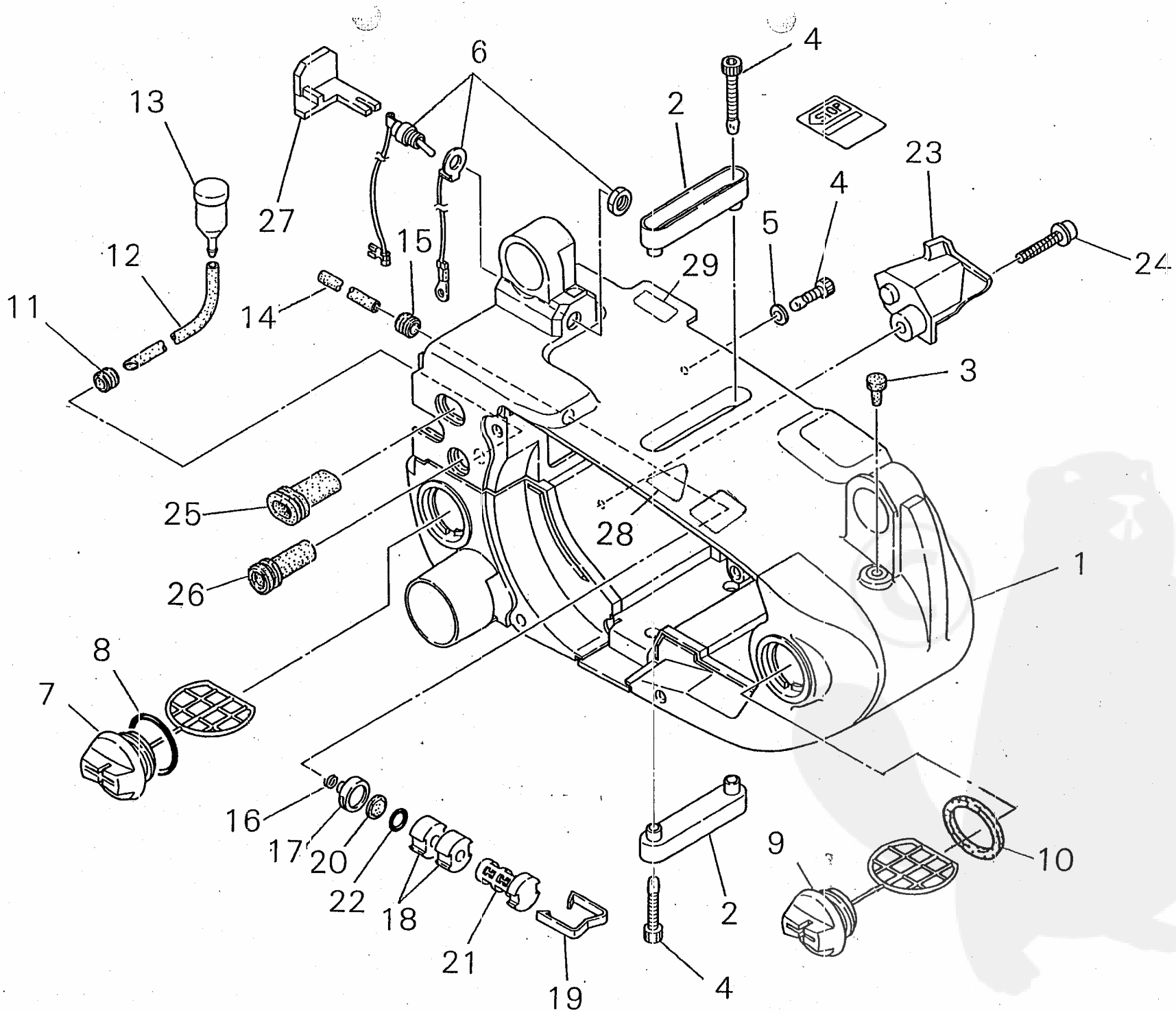
6
4
13
2
23
27
4
5
15
12
29
24
11
14
3
25
28
26
1
8
7
16
17
20
22
18
21
19
4
2
9
10

PRICE:(¥)

Ref. No	Part No.	Part Name	Q'ty	emarks
2- 1	72322-31110	ENGINE COVER	1	
2	72320-31130	INSERT COVER	2	
3	22115-57120	VALVE OIL TANK	1	
4	11060-05200	BOLT ADHESIVE	5	
5	22100-31210	WASHER	1	
6	72320-31200	SWITCH ASSY	1	
7	72320-31301	CAP ASSY	1	
8	02301-02402	• O RING	1	
9	72320-31401	CAP ASSY	1	
10	22160-21351	• GASKET CAP	1	
11	72320-85210	GROMMET FUEL	1	
12	72320-85220	BREATHER PIPE	1	
13	20035-85522	VALVE	1	
14	72320-85330	FUEL PIPE	1	
15	72320-85210	GROMMET FUEL	1	
16	20020-85540	CLIP	1	
	22115-85401	FUEL FILTER SUB ASSY	1	
17	22128-85410	• WEIGHT FUEL	1	
18	22128-85421	• FILTER	2	
19	22128-85440	• CLIP FILTER	1	
20	22118-85460	• SCREEN	2	
21	22128-85470	• SLEEVE	1	
22	22128-85480	• RING	1	
23	72320-52510	CHAIN STOPPER	1	
24	70140-31480	BOLT PC	1	
25	72320-82230	GROMMET CARBURETOR	1	
26	72320-82240	GROMMET SLOW	1	
27	72320-82350	GROMMET SWITCH	1	
28	19402-00083	LABEL CAUTION	1	
29	19401-00093	LABEL INST	1	

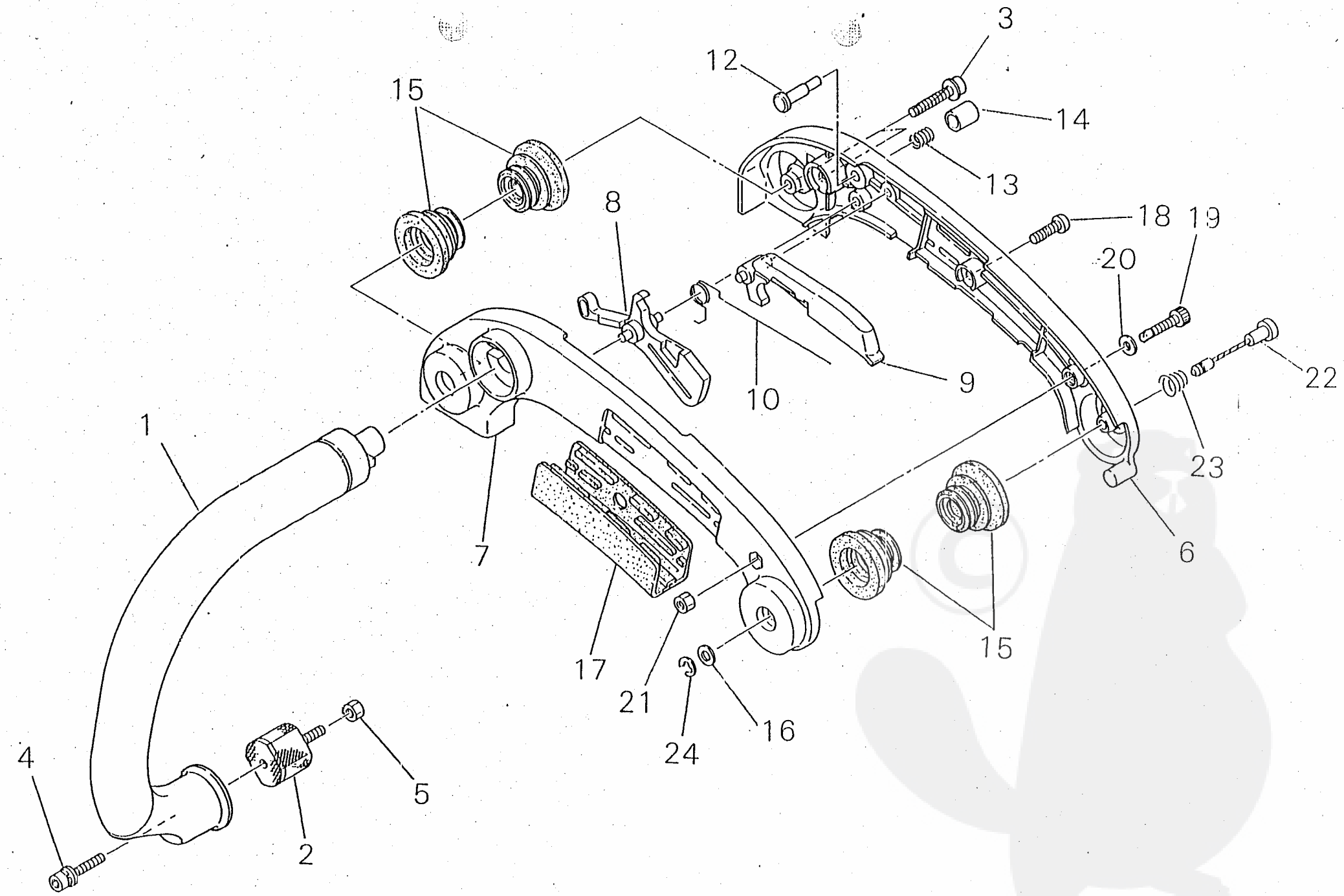
3
12
14
15
13
8
18
19
20
9
10
22
1
23
7
6
15
17
21
16
24
4
5
2

PRICE:(¥)

Ref. No	Part No.	Part Name	Q'ty	Remarks
3- 1	72320-32111	FRONT HANDLE	1	
2	22135-32160	CUSHION 22B	1	
3	70140-31480	BOLT PC	2	
4	11022-05120	BOLT SPW	1	
5	20011-12260	NUT	1	
6	72320-33110	REAR HANDLE R	1	
7	72320-33120	REAR HANDLE L	1	
8	72320-33131	THROTTLE LEVER	1	
9	72320-33140	LOCK LEVER	1	
10	72320-33150	THROTTLE SPRING	1	
12	72320-33170	STOPPER ROD	1	
13	22150-82530	SPRING	1	
14	72320-33190	STOPPER BUTTON	1	
15	72321-33210	CUSHION REAR	4	
16	01610-06080	WASHER	1	
17	72320-33231	GRIP	1	
18	01270-04122	SCREW TAPPING	1	
19	11060-05200	BOLT ADHESIVE	1	
20	01610-05080	WASHER	1	
21	20011-12260	NUT	1	
22	72320-33310	STOPPER	1	
23	72320-33320	SPRING	1	
24	02434-40060	SNAP RING	1	

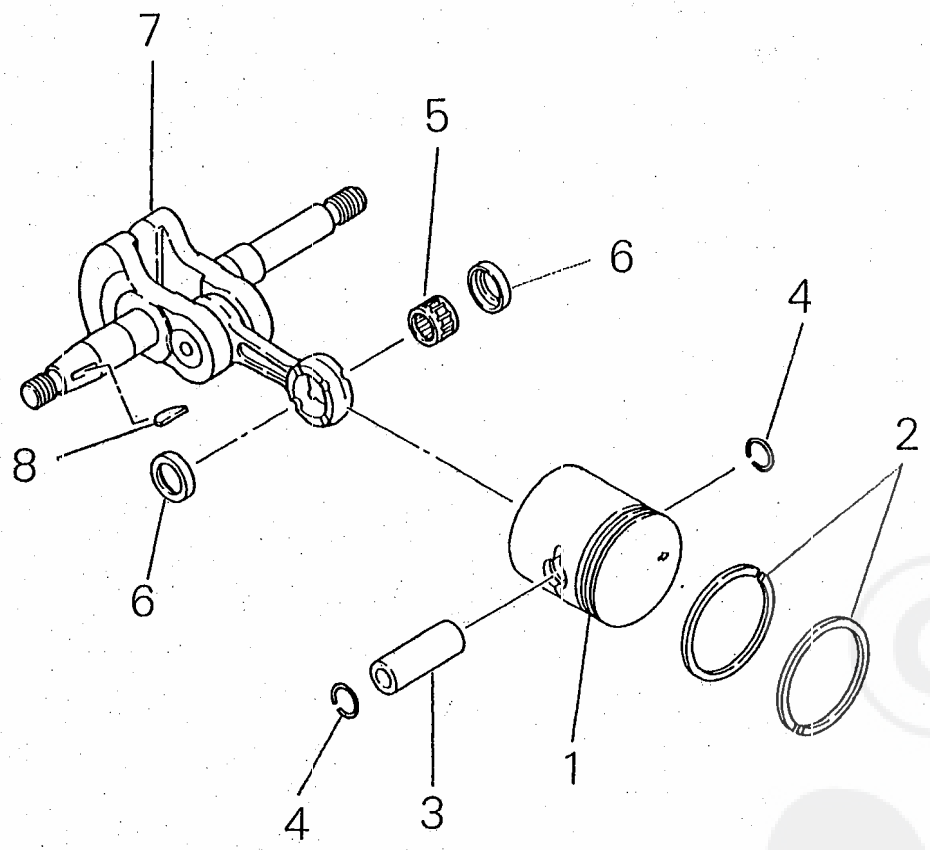
7
5
6
4
2
8
6
1
4
3

PRICE:(¥)

Ref. No	Part No.	Part Name	Q'ty	emarks
4- 1	72320-41110	PISTON	1	
2	72320-41210	PISTON RING	2	
3	20010-41310	PISTON PIN	1	
4	22100-41230	SNAP RING	2	
5	20010-41330	NEEDLE BEARING	1	
6	22156-41340	THRUST WASHER	2	
7	72320-42000	CRANK SHAFT ASSY	1	
8	02403-03100	KEY	1	

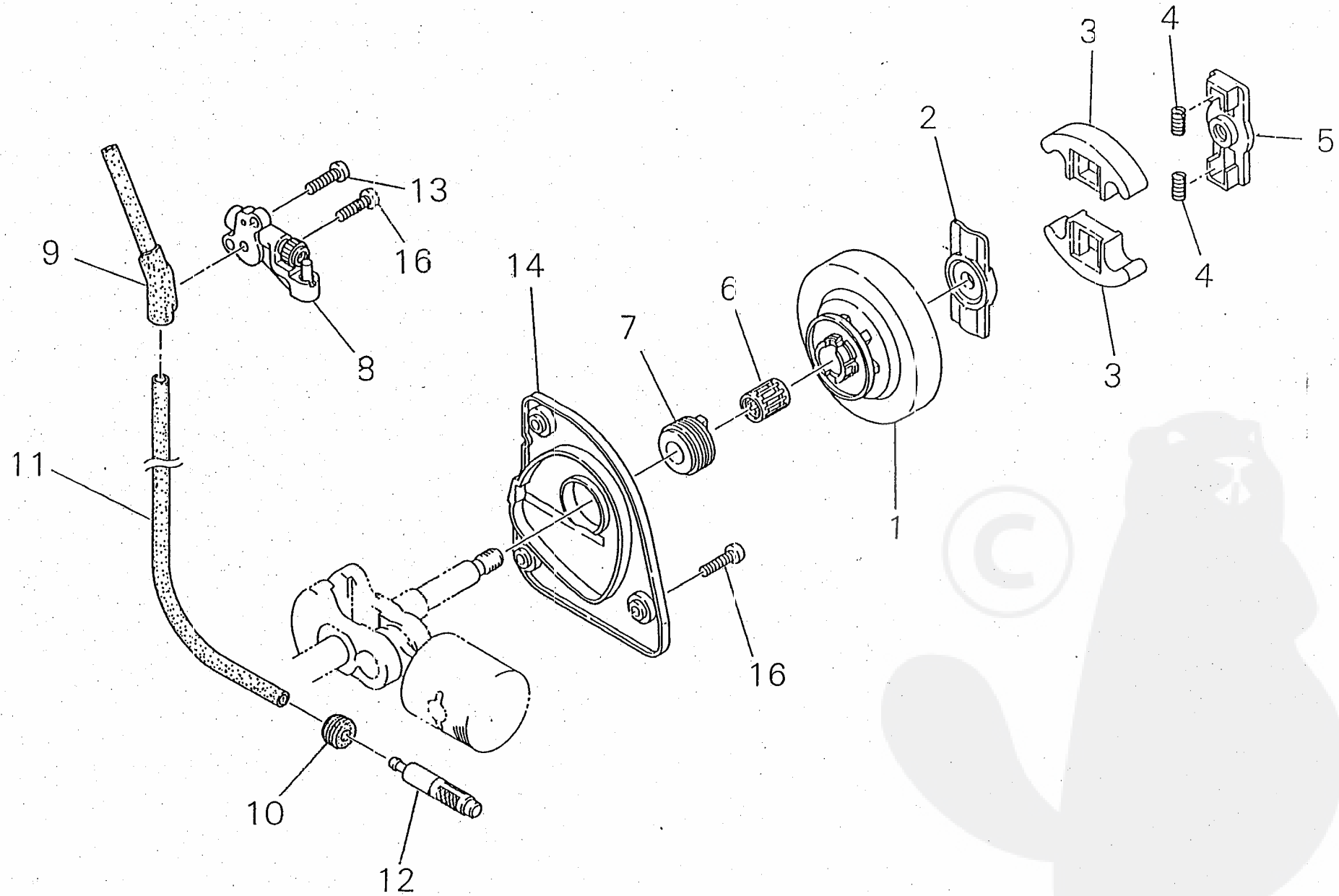
3
4
2
5
13
9
16
14
6
7
4
8
3
11
1
16
10
12

PRICE:(¥)

Ref. No	Part No.	Part Name	Q'ty	emarks
5- 1	72320-51110	CLUTCH DRUM	1	
	72320-51200	CLUTCH ASSY	1	
2	72320-51210	• CLUTCH BOSS A	1	
3	72320-51220	• CLUTCH SHOE	2	
4	22160-51230	• CLUTCH SPRING	2	
5	72320-51240	• CLUTCH BOSS B	1	
6	22102-51310	NEEDLE BEARING	1	
7	72320-55110	GEAR	1	
8	72320-55200	OIL PUMP ASSY	1	
	72320-55300	OIL FILTER ASSY	1	
9	72320-55310	• GROMMET PUMP	1	
10	72320-55320	• GROMMET OIL	1	
11	72320-55330	• OIL PIPE	1	
12	22154-55330	• OIL FILTER	1	
13	01270-04122	SCREW TAPPING	1	
14	72320-56110	PUMP COVER	1	
16	01270-04162	SCREW TAPPING	4	

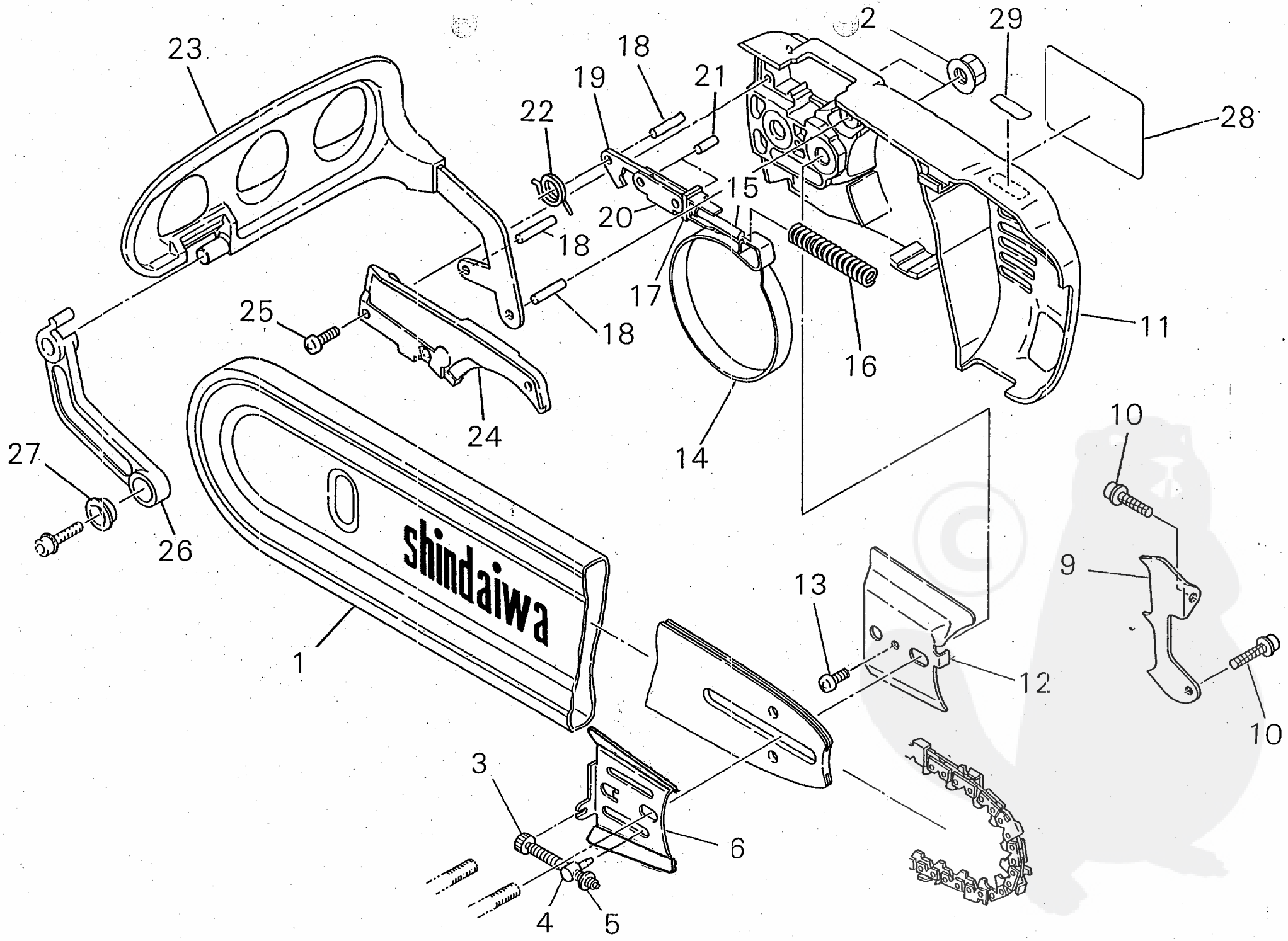
23
22
19
18
21
2
29
28
15
20
18
17
25
18
16
11
24
14
27
26
10
9
13
12
10
1
3
6
4
5

PRICE:(¥)

Ref. No	Part No.	Part Name	Q'ty	emarks
6- 1	19600-44100	CHAIN COVER	1	
2	22150-52411	NUT	2	
3	22154-52421	SLIDE SCREW	1	
4	22150-52440	SLIDE PIECE	1	
5	22154-52450	PUSH NUT	1	
6	22159-54150	GUIDE PLATE A	1	
9	72320-52530	SPIKE	1	
10	70140-31480	BOLT PC	2	
	72320-54001	BRAKE ASSY	1	
11	72320-54111	• CLUTCH COVER	1	
12	22159-54160	• GUIDE PLATE B	1	
13	01270-04082	• SCREW TAPPING	1	
14	72320-54210	• BRAKE BAND	1	
15	72320-54220	• ROD	1	
16	72320-54230	• BRAKE SPRING	1	
17	72316-54310	• ADJUST PLATE	1	
18	12492-40140	• ROLLER	3	
19	72316-54560	• INNER LEVER	1	
20	72316-54570	• TIE STRAP	1	
21	12492-40080	• ROLLER	2	
22	72320-54580	• SPRING LEVER	1	
23	72322-54510	• BREAK LEVR	1	
24	72320-54610	• PLATE	1	
25	01270-04122	• SCREW TAPPING	3	
26	72320-54710	STAY	1	
27	22169-54660	SPACER	1	
28	22178-92170	LABEL TRADE	1	
29	72320-92150	CAUTION PLATE	1	

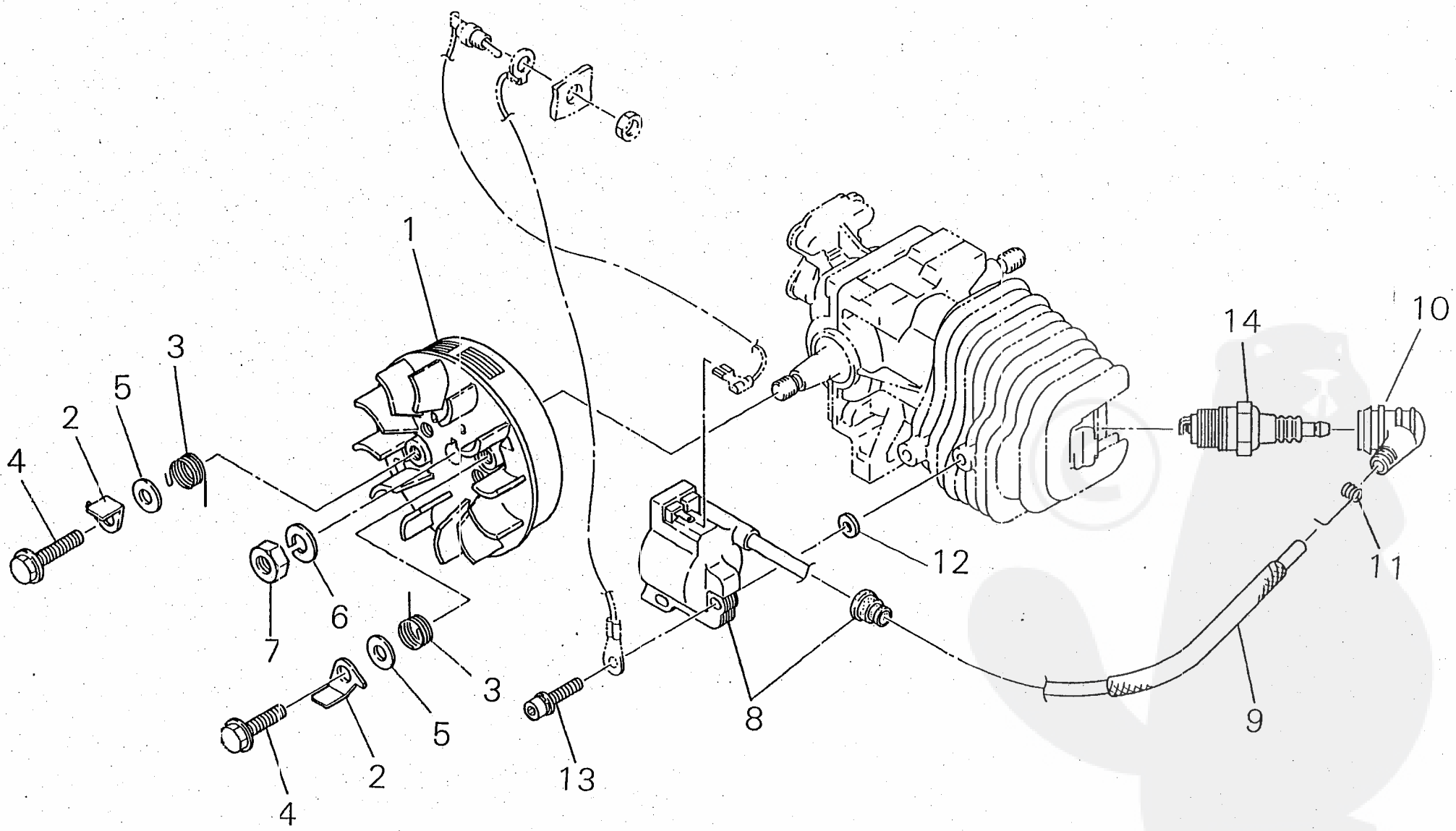
1
2
3
4
5
6
7
8
9
10
11
12
13
14

PRICE:(¥)

Ref. No	Part No.	Part Name	Q'ty	emarks
7- 1	72320-71110	ROTOR	1	
2	72320-71410	RATCHET	2	
3	72320-71420	SPRING RATCHET	2	
4	22100-71441	BOLT	2	
5	22100-71430	WASHER	2	
6	01600-08201	SPRING WASHER	1	
7	22100-43231	NUT	1	
8	72320-71600	COIL SUB ASSY	1	
9	72320-71640	TUBE	1	
10	22160-72220	PLUG CAP	1	
11	22154-72230	SPRING PLUG	1	
12	22106-71810	INSULATOR	2	
13	11022-04200	BOLT SPW	2	
14	13000-13507	SPARK PLUG BPMR7A	1	

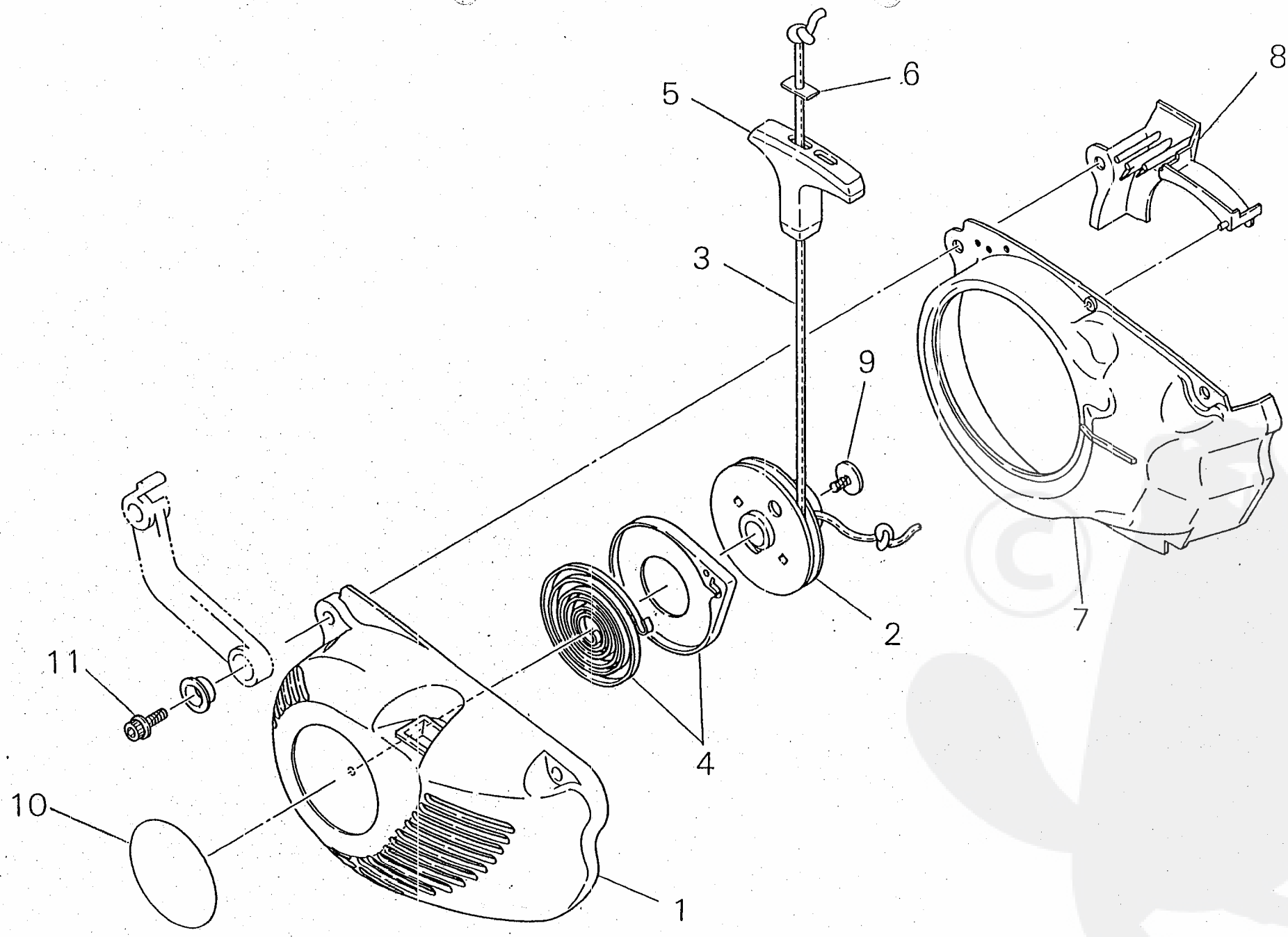
1
2
3
4
5
6
7
8
9
10
11

PRICE:(¥)

Ref. No	Part No.	Part Name	Q'ty	Remarks
8-	72320-75100	RECOIL STARTER SUB ASSY	1	
1	72320-75110	• RECOIL CASE	1	
2	72320-75210	• REEL	1	
3	72320-75410	• ROPE	1	
4	22155-75410	• RECOIL SPRING ASSY	1	
5	22159-75420	• KNOB RECOIL	1	
6	22104-75430	• STOPPER KNOB	1	
7	72320-75610	AIR PLATE COVER	1	
8	72320-75620	AIR PLATE RECOIL	1	
9	72320-75420	SCREW TAPPING	1	
10	22178-92180	LABEL TRADE	1	
11	22169-32210	BOLT PC	4	

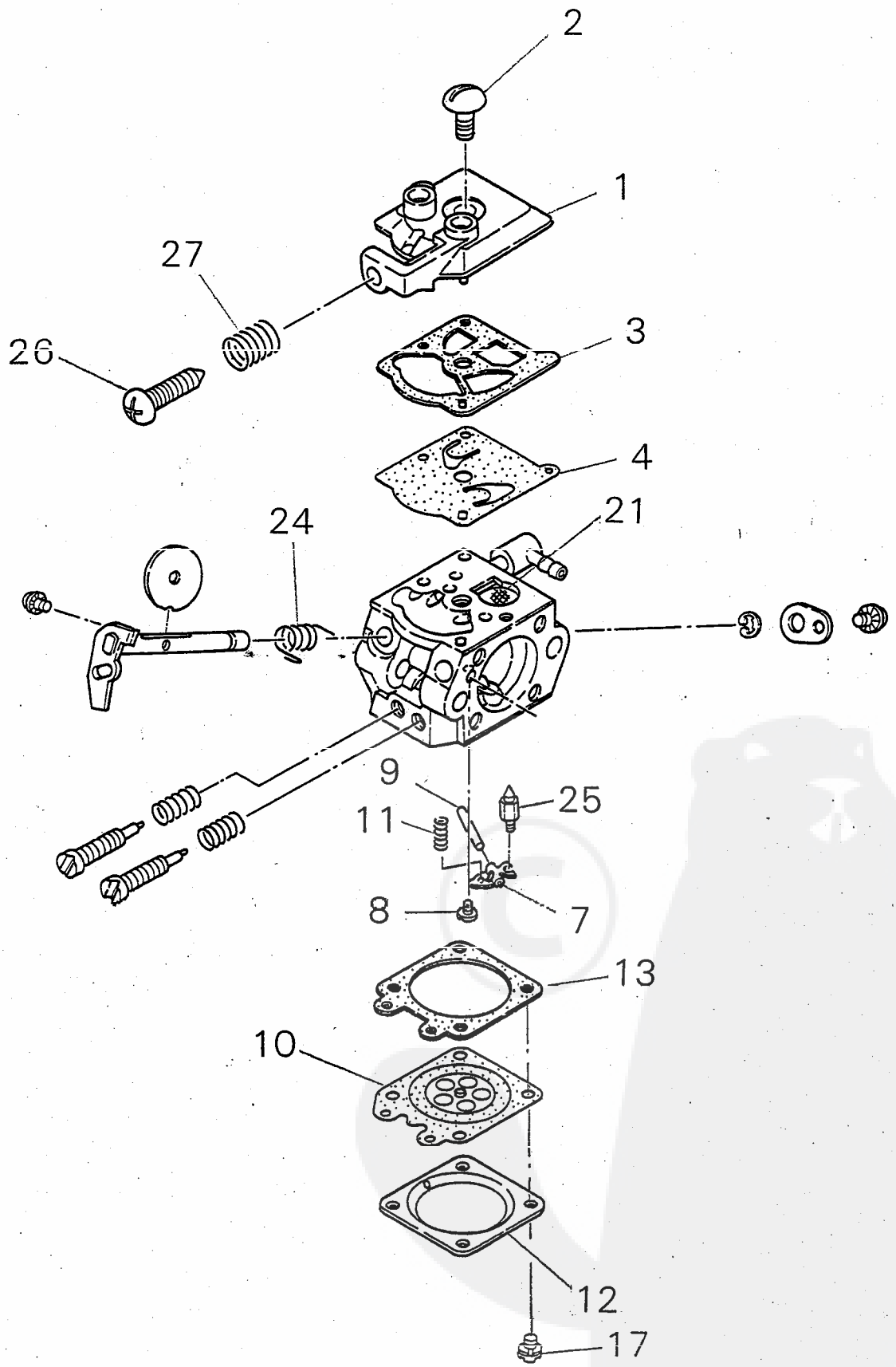
2
1
27
26
3
4
24
21
9
25
11
8
7
13
10
12
17

PRICE:(¥)

Ref. No	Part No.	Part Name	Q'ty	Remarks
9-	72320-81002	CARBURETOR ASSY	1	
1	22156-81120	• PUMP COVER ASSY	1	
2	22100-81130	• SCREW	1	
3	22128-81140	• GASKET PUMP COVER	1	
4	22128-81150	• DIAPHRAGM PUMP	1	
7	22100-81230	• LEVER	1	
8	22100-81240	• SCREW	1	
9	22100-81250	• PIN	1	
10	22100-81260	• DIAPHRAGM ASSY	1	
11	74342-81270	• SPRING LEVER	1	
12	22100-81280	• COVER DIAPHRAGM	1	
13	22100-81290	• GASKET DIAPHRAGM	1	
17	22100-81351	• SCREW	4	
21	70030-81380	• SCREEN	1	
24	72320-81420	• RETURN SPRING	1	
25	20036-81440	• NEEDLE VALVE	1	
26	72320-81410	• IDEL SCREW	1	
27	22156-81420	• SPRING IDLE	1	
	22128-81920	GASKET KIT	1	
3	22128-81140	• GASKET PUMP COVER	1	
13	22100-81290	• GASKET DIAPHRAGM	1	
	22128-81910	DIAPHRAGM KIT	1	
4	22128-81150	• DIAPHRAGM PUMP	1	
10	22100-81260	• DIAPHRAGM ASSY	1	

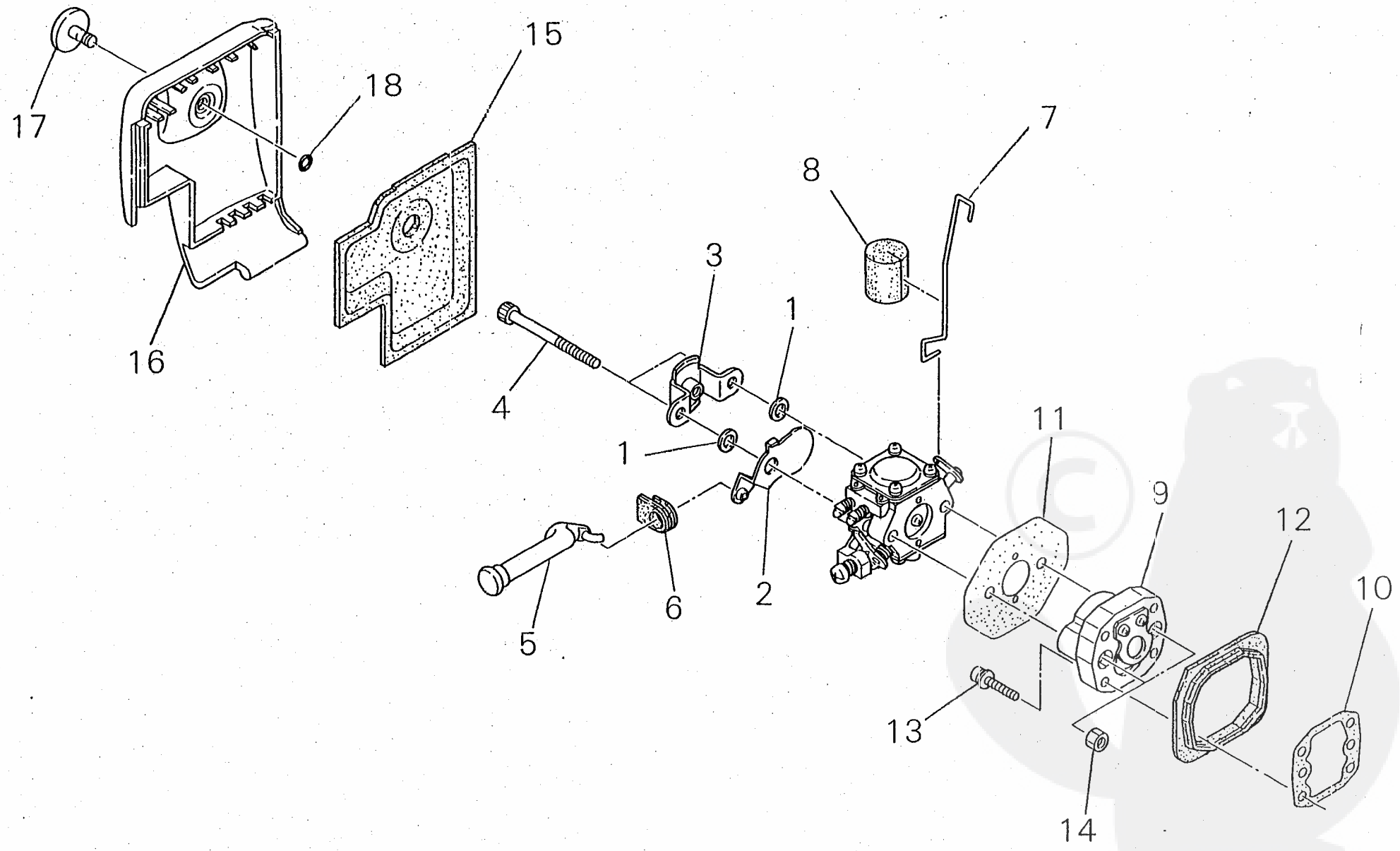
17
18
15
16
4
3
1
1
8
7
11
9
12
10
5
6
2
13
14

PRICE:(¥)

Ref. No	Part No.	Part Name	Q'ty	emarks
10- 1	22100-82110	WASHER CARBURETOR	2	
2	72320-82120	CHOKE PLATE	1	
3	72320-82130	BRACKET CARBURETOR	1	
4	01020-05500	BOLT	2	
5	72320-82141	CHOKE ROD	1	
6	72320-82150	GROMMET CHOKE	1	
7	72320-82210	THROTTLE ROD	1	
8	72320-82220	FILTER	1	
9	72320-83102	REED VALVE COMP	1	
10	72320-83192	GASKET VALVE	1	
11	72320-83222	GASKET CARBUREOR	1	
12	72320-83230	GROMMET VALVE	1	
13	11022-04200	BOLT SPW	4	
14	20011-12260	NUT	2	
15	72320-82310	AIR CLEANER	1	
16	72320-82410	CLEANER COVER	1	
17	72320-82420	KNOB BOLT	1	
18	22100-82430	O RING	1	

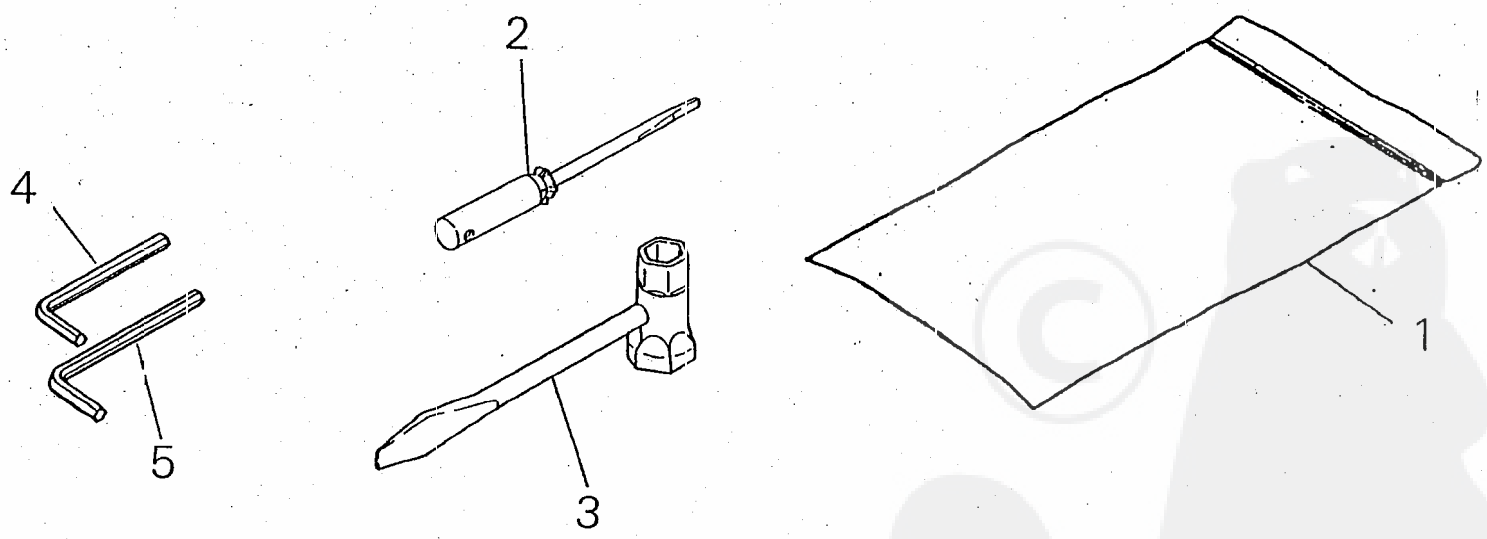
2
4
1
5
3

PRICE:(¥)

Ref. No	Part No.	Part Name	Q'ty		emarks
11-	72320-91000	TOOL SET	1		
1	19639-01100	• POLY BAG	1		
2	22150-91160	• DRIVER	1		
3	72320-91410	• PLUG WRENCH	1		
4	09026-03001	• HEXA WRENCH	1		
5	09026-04001	• HEXA WRENCH	1		

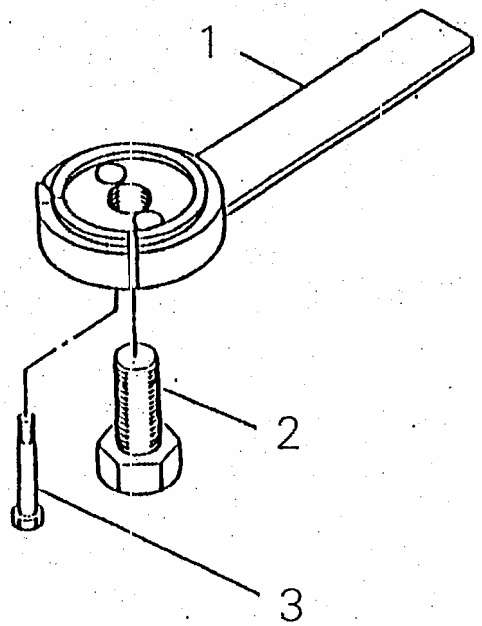
1
2
3

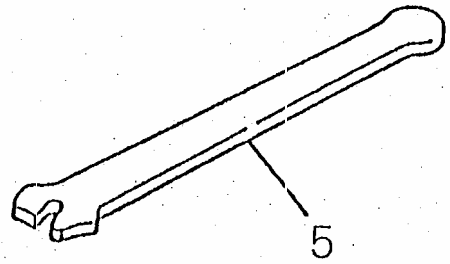
5

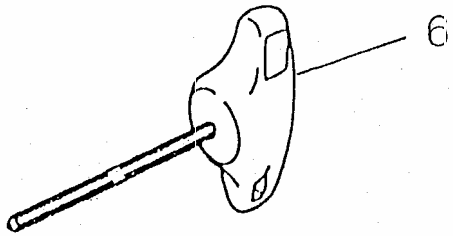
6

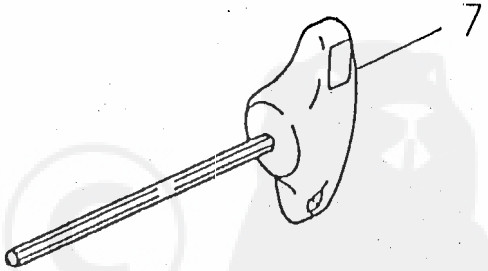
7

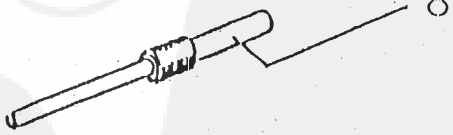
8

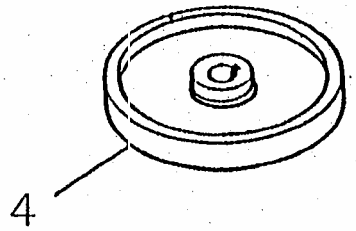
4

PRICE:(¥)

Ref. No	Part No.	Part Name	Q'ty	emarks
12-	22104-96100	PULLER ASSY	1	
1	22104-96110	• PULLER	1	
2	22100-96121	• CENTER BOLT	1	
3	22102-96130	• BOLT	1	
4	22106-96210	SET GAUGE	1	
5	22108-96410	STOPPER	1	
6	22155-96521	T WRENCH 4	1	
7	22155-96531	T WRENCH 5	1	
8	22102-96530	SET PIN	1	

©